CITY OF COTTONWOOD
PLANNING & ZONING COMMISSION
COUNCIL CHAMBERS
826 N. Main St.
Cottonwood, AZ 86326

REGULAR MEETING
Monday, August 15, 2016
6:00 pm.

I. CALL TO ORDER

A. Roll Call
B. Approval of Minutes: July 18, 2016, regular meeting.

II. CALL TO THE PUBLIC

This is the time for the public to comment on any matter that does not appear on the agenda. Commission members may not discuss items not identified on the agenda. Pursuant to A.R.S. §38-431.01(H), action taken as a result of public comment will be limited to directing staff to study the matter, responding to criticism, or scheduling the matter for consideration at a later date. Comments are limited to five minutes for each person.

III. OLD BUSINESS: None.

IV. NEW BUSINESS:

1. **DR 16-016 3 KINGS KASBAR-** Request for Design Review Approval for the renovation of an existing building in Old Town, to include outdoor seating. Address: 102 E. Pima St. APN: 406-34-052. Owner: Verde Valley Entertainment Group LLC. Agent: Dan Surber.

2. **PCU 16-008 MESQUITE HILLS SPECIAL DIRECTIONAL SIGN-** Consideration of a Conditional Use Permit to allow a special directional sign to the Mesquite Hills subdivision. This sign will be located on property zoned C-1 (Light Commercial), located at 585 W. State Route 89A. and Candy Lane. APN: 406-33-131Q. Owner: Marcus J. Lawrence Medical Center. Agent: John Alvey.

A verbal comment period will be provided during each hearing item. The Chair may impose a time limit on each speaker. The Commission will not consider written materials submitted less than three working days before the meeting.

Pursuant to A.R.S. § 38-431.02(B) the Commission may vote to go into executive session on any agenda item pursuant to A.R.S. § 38-431.03(A)(3) and (4) for discussion and consultation for legal advice with the City Attorney.

The Cottonwood Council Chambers is accessible to the handicapped in accordance with Federal "504" and "ADA" laws. Those with needs for special typeface print or hearing devices may request these from the Planning Technician at 634-5505 (TDD 634-5526). All requests must be made at least 24 hours before the meeting.

Pursuant to A.R.S. 38.431.03 (A)(3), the Commission my vote to convene in executive session to obtain legal advice regarding the scope of its review of the project at this stage in the process.

V. DISCUSSION ITEM: None.

VI. INFORMATIONAL REPORTS AND UPDATES:

A brief summary of current events by Chairperson, Commission members, and/or Community Development Director. (The public body does not propose, discuss, deliberate, or take legal action on any matter brought up during this summary unless the matter is properly noticed for legal action).

VII. ADJOURNMENT

A verbal comment period will be provided during each hearing item. The Chair may impose a time limit on each speaker. The Commission will not consider written materials submitted less than three working days before the meeting.

Pursuant to A.R.S. § 38-431.02(B) the Commission may vote to go into executive session on any agenda item pursuant to A.R.S. § 38-431.03(A)(3) and (4) for discussion and consultation for legal advice with the City Attorney.

The Cottonwood Council Chambers is accessible to the handicapped in accordance with Federal "504" and "ADA" laws. Those with needs for special typeface print or hearing devices may request these from the Planning Technician at 634-5505 (TDD 634-5526). All requests must be made at least 24 hours before the meeting.

Official Minutes of the City of Cottonwood
Planning & Zoning Commission Regular Meeting
Held, July 18, 2016, at 6:00 P.M. at the City Council Chambers
826 N. Main St. – Cottonwood, Arizona

CALL TO ORDER & ROLL CALL

Chairman Kiyler called the meeting to order at 6:02 p. m. Roll call was taken as follows:

Planning & Zoning Commission Members Present

Chairman Kiyler
Vice Chairman Robert Williams
Thomas Narwid
Judd Wasden
Suzanne Poslaiko

Planning & Zoning Commission Members Absent

Jean Wilder

Staff Members Present

Berrin Nejad, Community Development Manager
Charlie Scully, Community Development Planner
Jim Padgett, Community Development Assistant Planner/Code Enforcement Coordinator
Christina Anderson, Planning Technician, Recorder

APPROVAL OF MINUTES OF JUNE 20, 2016-REGULAR MEETING

Motion: ***To approve the minutes of 6/20/2016-regular meeting***

Made by: ***Vice Chairman Williams***
Second: ***Commissioner Poslaiko***
Vote: ***Unanimous***

CALL TO THE PUBLIC (NONE)

OLD BUSINESS

1. **PCU 16-005 VETRAPLEX-** Request to extend completion date of project to allow for additional funding. Address: 125 S. 6th St. APN: 406-42-223A. Owner: Vetraplex LLC. Agent:Gary Rideout. Below is Padgett's report:

MEMO

TO: Planning and Zoning Commission

FROM: Scott Ellis, Planner

THROUGH: Berrin Nejad, Community Development Manager

HEARING DATE: July 18, 2016

HEARING NUMBER: **PCU-16-005 VetraPlex**

On February 22, 2016 the Commission approved PCU 16-005 subject to a stipulation in which the conditions of approval shall be completed by July 1, 2016 or the Conditional Use Permit shall be subject to revocation. The applicant is requesting an extension of this date to allow for additional funding to complete the project. Completion of the project is scheduled for October 31, 2016.

Vice Chairman Williams asked the applicant when they anticipate completion of the project in order to determine that they give the applicant enough time in the stipulation. Applicant responded that they would like to have their grand opeining on Veterans Day so by November 11, 2016. Vice Chairman Willaims suggested a six (6) month extension on the completion date. Applicant was satisfied with that length of time.

Motion: ***To Approve PCU 16-005 Vetraplex with the following stipulations:***

1. ***That the project is developed in conformance with the Code Review Board comments dated January 8, 2016.***
2. ***The conditions of approval shall be completed by six (6) months from the date of approval by the Planning & Zoning Commission or the Conditional Use Permit shall be subject to revocation.***
3. ***A Certificate of Zoning Compliance documenting the completion of conditions shall be issued by the timeframe specified.***

Made by: ***Vice Chairman Williams***
Second: ***Commissioner Narwid***
Vote: ***Unanimous***

NEW BUSINESS

1. **DR 16-015 FANDANGO FENCE-** Request for Design Review Approval to allow a seven (7) foot tall fence with new double gate in a C-1 (Ligh Commercial) zoned property in Old Town Cottonwood. Address: 1037 N. Main St. APN: 406-34-006A. Owner: Michael & Patricia Van Horn. Agent: Joel Dench. Below is Nejad's report:

STAFF MEMO

TO: Planning and Zoning Commission

FROM: Scott Ellis, City Planner

THROUGH: Berrin Nejad, Community Development Director

HEARING DATE: July 18, 2016

SUBJECT: **DR 16-015 Fandango Fence**

REQUEST:
The applicant is requesting Design Review approval to place a new wrought iron fence in Old Town.

Applicant:
Joel Dench
19801 N. 59th Ave #12560
Glendale, AZ 85308

Property Owner :
Michael & Patricia Van Horn
16 Colebrick Ct.
Shamong, NJ 08088

BACKGROUND:
The property owners of 1037 N. Main Street are looking to replace fencing with a new 7 foot tall wrought iron fence with double gates and galvanized corrugated metal panels. A 26ft x 10ft tall corrugated metal wall will be on the back east side patio.

Vice Chairman Williams asked the applicant if they are replacing both the side and front or just the side. Applicant responded that they will be replacing the front, side, and back; the fence in the front is currently eight (8) feet tall we will be reducing that down to seven (7) feet, currently the back fence is only six (6) feet tall we would like to make that ten (10) feet in height to add a buffer for the residential rental behind the building. Chairman Kiyler asked if the corrugated metal will be painted at all. Applicant responded that the owners of the property are undecided, the building currently has corrugated metal on it so leaving it unpainted would tie into the building. Commissioner Narwid asked the applicant why not continue the existing block instead of the corrugated metal and what is the need for the ten (10) foot fence. Applicant responded that the ten (10) foot fence would match the roof line of the existing storage building, and that it will act as a buffer for the residence behind the property, and the owners wanted to use corrugated metal not block. Commissioner Wasden liked the ten (10) foot fence in the back as that would take the existing roof line and extend it; it is a good buffer for the residence behind the property. Vice Chairman said will make a definite improvement on this building.

Motion: ***To Approve DR 16-015 Fandango Fence to be constructed as presented along the side and back.***

Made by: ***Vice Chairman Williams***
Second: ***Commissioner Wasden***
Vote: ***Unanimous***

2. **PCU 16-007 & DR 16-013 TAVERN HOTEL ADDITION-** Request for a Conditional Use Permit and Design Review to expand an existing hotel in a C-1 (Light Commercial) zoned property. Address: 904 N. Main St. APN: 406-22-022A. Owner: Jerome Properties LLC. Agent: Bob Backus. Below is Nejad's report:

STAFF MEMO

TO: Planning and Zoning Commission

FROM: Scott Ellis, Planner

THROUGH: Berrin Nejad, Community Development Manager

HEARING DATE: July 18, 2016

PROJECT NUMBER: **PCU 16-007/DR 16-013 Tavern Hotel Expansion**

Approval of a Conditional Use Permit and Design Review is requested to allow the expansion of the existing Tavern Hotel with an additional building of 26 rooms on property in Old Town zoned C-1 (Light Commercial.) The proposed site is located at 904 N. Main Street.

PROJECT DATA AND FACTS:

Applicant/Agent	Bob Backus
Property Owner	Jerome Properties
Location of Property	904 N. Main Street (Corner of W. Pima St. and N. Cactus St.)
Present Zoning and Land Use	C-1 (Light Commercial) Existing Tavern Hotel.
Description of Applicant's Request	To expand the existing hotel and construct a new 26 room building to the north of the existing hotel.

LAND USE:

Description and Character of Surrounding Area
Existing Tavern Hotel to be expanded with a new adjacent, two-story building to provide an additional 26 guest rooms, lobby, laundry facilities, beauty salon, and outdoor seating. The property owner has purchased the adjacent properties to the north of the existing hotel and has combined them into one parcel. There are a variety of mixed uses surrounding the property including single family homes and commercial businesses.

Adjacent Land Uses and Zoning	
North:	C-1 (Light Commercial) – Vacant lot.
South:	C-1 (Light Commercial) – Vacant lot to be improved and used as parking for this project.
East:	C-1 (Light Commercial) – Tavern Grill, retail, and City owned parking lot.
West:	R-2 (Single Family Residential) – Single family homes.

PROJECT PROPOSAL:

Background:
The property owner currently owns and operates several businesses throughout Old Town, including the existing Tavern Grill and Tavern Hotel. The current hotel consists of 10 rooms plus a "cottage" in an adjacent building. The adjoining three parcels to the north of the existing hotel along Cactus St. have been purchased by the hotel owner and combined into one single lot which will allow for the development of the new hotel. Existing structures on the property will be removed.

The existing C-1 zoning of the property allows for consideration of a Conditional Use Permit for development of a hotel at this location.

BUILDING AND STRUCTURE DESIGN:

The new building will be two-stories, approximately 18,093 square feet, with a maximum height of 29'4". A mixture of CMU walls, resysta wood siding, river rock to match existing hotel, steel columns, and stucco matching the existing hotel will be used throughout the exterior of the building to give it a modern, upscale look.

Please see the attached color samples and finish details submitted by the applicant.

SITE PLAN:

Parking:
The subject property falls outside of the parking exemption boundary which allows exemptions for requiring off-street parking. Hotels and motels require 1 off-street parking space per guestroom, plus 1 per 2 employees. The site plan indicates 4 employees for the hotel which will require 2 off-street parking spaces, 26 additional off-street parking spaces would be required for the guestrooms. The beauty salon also requires 2 spaces per service chair. Staff has been informed that there will be 4 service chairs, requiring a total of at least 36 additional off-street parking spaces.

The City's Parking Ordinance allows the Community Development Director to administratively approve a reduction of up to 50% of the required off-street parking for non-residential uses located within 300 feet of a City of Cottonwood owned public parking lot. The project site is adjacent to a City owned parking lot and the Community Development Director has approved this 50% reduction, requiring the owner to provide at least 18 additional off-street parking spaces.

As shown on the site plan, 9 new off-street parking spaces will be provided immediately in front of the hotel on the east side. The owner also owns a parcel of land to the south of the project, across W. Pima Street that will be developed into an additional 7 parking spaces. With the 9 spaces adjacent to

the building and 7 spaces across the street, a total of 16 new off-street parking spaces will be provided for this project.

Future land agreements with a neighboring property owner may result in an additional 11 off-street parking spaces for the project.

Lighting:
Exterior lighting for the hotel will meet all Lighting Ordinance requirements and Dark Sky requirements.

Signage:
No signage has been proposed at this time for this project.

Landscape Plans:
A landscaping plan has been submitted which consists of various plants and seasonal flowers. The City's Landscape Ordinance does not include seasonal flower beds as part of landscape requirements and therefore the one identified on the site plan should not be looked at as meeting the landscape requirements. Most of the plants listed appear on the in the City's approved plant list in the Landscape Ordinance. The water features identified on the landscape plan will be 4 galvanized tub planters (horse troughs) placed side by side with Horsetail Reeds planted inside. The water feature will have a re-circulator and bubbler system.

Access/Driveway:
Access to the building will be via the City owned parking lot to the east off N. Main Street and W. Pima Street.

Utilities:
All utilities are available to the site.

CRB Review:
This project was reviewed by the Code Review Board on March 8, 2016. The applicant will need to meet all code requirements, as indicated.

REQUIRED FINDINGS:

A Conditional Use Permit shall only be granted if the approving body determines that the project conforms to the required findings in this Section. (*Zoning Ordinance, Section 302*.) If it is determined that it is not possible to confirm the required findings for the proposed CUP, whether as submitted or through conditions that may be required, the application shall be denied. The specific basis for any decision shall be established in the record as findings of fact. The following criteria shall be considered as the basis for the findings to approve, approve with conditions or deny the Conditional Use Permit:

General Findings:

The principal use has been established at this location for several years with the existing hotel and cottage. The expanded site plan is compatible with surrounding uses and is appropriate for the location in Old Town as a tourist destination. A need for additional hotel rooms has been mentioned by various visitors to the city and event organizers. The use will not be detrimental to the health, safety and well-being of surrounding properties.

Compatibility with Surroundings Uses:

The current hotel and proposed expansion and beauty shop is compatible with the surrounding retail, restaurants, wine tasting, events, and trails in the Old Town vicinity.

Traffic and Circulation:

Main Street provides adequate capacity to serve the use. The site is served by sidewalks on adjacent streets in Old Town. An agreement between the property owner, an adjacent property owner, and the City is being worked out for the alley between the properties fronting N. Cactus Street and N. Main Street to be improved and provide one-way directional traffic flow.

Infrastructure:

Infrastructure systems are adequate to serve the proposed use.

Nuisance Activities:

No nuisance activities have been identified at this location for the existing or proposed use.

Buffering and Screening:

No additional buffering is required.

Stipulations:

A Conditional Use Permit is necessary to accommodate the expansion of the site plan of the adjacent C-1 property. If approved, staff recommends the following stipulations:

1. That the project is developed in conformance with the development plans submitted for the July 18, 2016 Planning and Zoning Commission meeting, and as may be further modified by the Planning and Zoning Commission.

2. That the project conforms to Code Review Board comments dated March 11, 2016.

3. That the project conforms to the Design Review requirements as approved separately by the Planning & Zoning Commission.

4. Building Permits shall be applied for by twelve (12) months from the date of approval by the Planning & Zoning Commission or the Conditional Use Permit shall be subject to revocation procedures.

5. A Certificate of Zoning Compliance documenting the completion of Conditional Use Permit conditions shall be issued prior to the Certificate of Occupancy.

6. Any other stipulations the Planning & Zoning Commission deems necessary.

Commissioner Narwid mentioned to staff that it appeared that the applicant is still two (2) parking spaces short, and that it was his understanding that along Cactus there is street parking. Staff responded that they cannot count off street parking in a development, the beauty shop may only have one chair, but we take into account for the maximum growth. Vice Chairman Williams asked staff if the commission approved the project tonight with sixteen (16) parking spaces how does staff control the parking spaces when they are short to begin with. Can we put stipulations on the seats? Staff responded that we would control that though the building permit process to ensure that it

doesn't exceed the parking requirements. Applicant addressed the commission regarding the parking, "I want to have parking for my guests in the future, because when there are events in Old Town I want to ensure parking for my hotel guests". Staff mentioned to the commission that parking is based on the ordinance, we will be looking to change the ordinance it just will not happen for this project. Applicant mentioned to the commission that he is the only property that has Main Street frontage and doesn't get to be part of the Old Town parking requirements. Vice Chairman Williams mentioned to the applicant that what is making the difference right now and I need to proceed are the four (4) beauty chairs. If we had a design for two (2) chairs it wouldn't be a problem or if it was just a spa. Applicant mentioned that they are working on a shared venture with some property owners, and the city regarding potential future parking. Commissioner Poslaiko commented that the project looks attractive and will be a nice addition to Old Town. Commissioner Wasden also thought that the project would be a great addition to Old Town and encouraged staff to work on an ordinance.

Motion: ***To approve PCU 16-007 & DR 16-013 with the following stipulations:***

1. ***That the project is developed in conformance with the development plans submitted for the July 18, 2016 Planning and Zoning Commission meeting.***
2. ***That the project is developed in conformance with the Code Review Board comments dated March 11, 2016.***
3. ***Building Permits shall be applied for by twelve (12) months from the date of approval by the Planning & Zoning Commission or the Conditional Use Permit shall be subject to revocation procedures.***
4. ***A Certificate of Zoning Compliance documenting the completion of Conditional Use Permit conditions shall be issued prior to the Certificate of Occupancy.***

Made by: ***Vice Chairman Williams***
Second: ***Commissioner Wasden***
Vote: ***Unanimous***

3. **Z 16-002 VINEYARDS AT COTTONWOOD-** Request for rezoning from existing PAD (Planned Area Development) to a new PAD (Planned Area Development) for property located on approximately 100.81 acres east of State Route 89A and Gorseta Roach Road. APN: 406-23-036V, 406-23-036W, 406-23-174B, 406-23-174C, & 406-32-080P. Owner: The Vineyards at Cottonwood I LLC. Agent: Granite Mountain Asset Management, LLC. Below is Scully's report:

STAFF MEMO

TO:	Planning and Zoning Commission
FROM:	Charlie Scully, Planner
THROUGH:	Berrin Nejad, Community Development Manager
HEARING DATE:	July 18, 2016

PROJECT NUMBER: Z 16-002

SUBJECT: **PAD REZONING *"The Vineyards at Cottonwood"***

PROJECT DATA AND FACTS:

Applicant/Agent	Granite Mountain Asset Management LLC KJ Kasun, Applicant Michael Foster, Project Coordinator
Property Owner/s	Granite Mountain Asset Management LLC The Vineyards at Cottonwood 1, LLC
Location of Property	W. State Route 89A at Groseta Ranch Road
Present Zoning and Land Use	PAD (Planned Area Development) Ord. 408 (2001)
Description of Applicant's Request	Rezoning PAD Zone (Planned Area Development) with new Ordinance.

LAND USE:

Description and Character of Surrounding Area
Residential development exists to the north (On the Greens MH Park) and east (Verde Heights, Robega Terrace and Grandview Terrace subdivisions developed between 1957 and 1972.) Commercial development generally to the south at Mingus Avenue, and undeveloped commercial property to the immediate south and west across SR 89A.

Adjacent Land Uses and Zoning	
North	MH Zone (Manufactured Home) – Pine Shadows and On the Greens
South	PAD – Vacant, future development area, and C-1 (Light Commercial) – gas station at Mingus Ave.
East	R-1 (Single-Family Residential) - Verde Heights unit 2 (1961)
West	C-1 (Light Commercial) and Town of Clarkdale

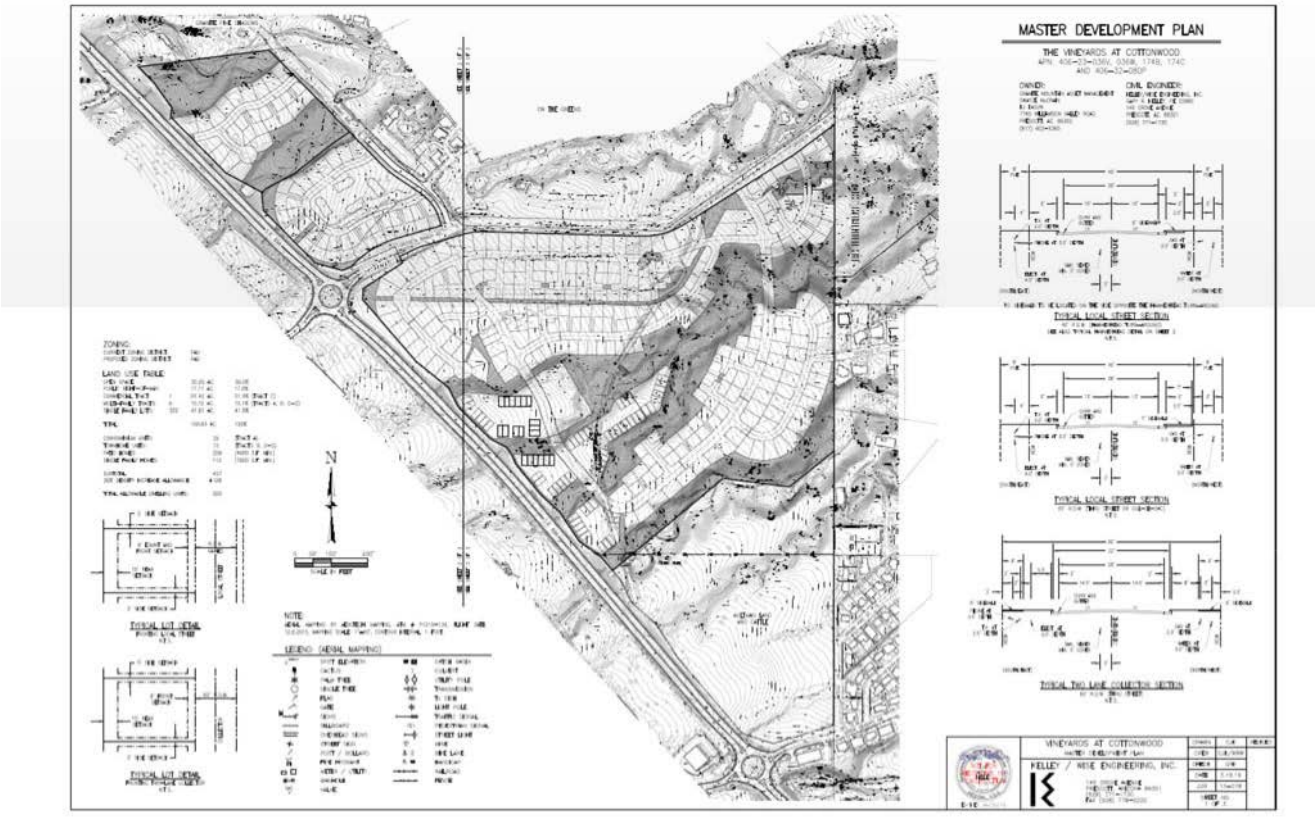
MASTER DEVELOPMENT PLAN
THE VINEYARDS AT COTTONWOOD
TYPICAL LOCAL STREET SECTION
TYPICAL LOCAL STREET SECTION
TYPICAL TWO LANE COLLECTOR SECTION
TYPICAL LOT DETAIL
TYPICAL LOT DETAIL
N
VINEYARDS AT COTTONWOOD
KELLEY / WILE ENGINEERING, INC.

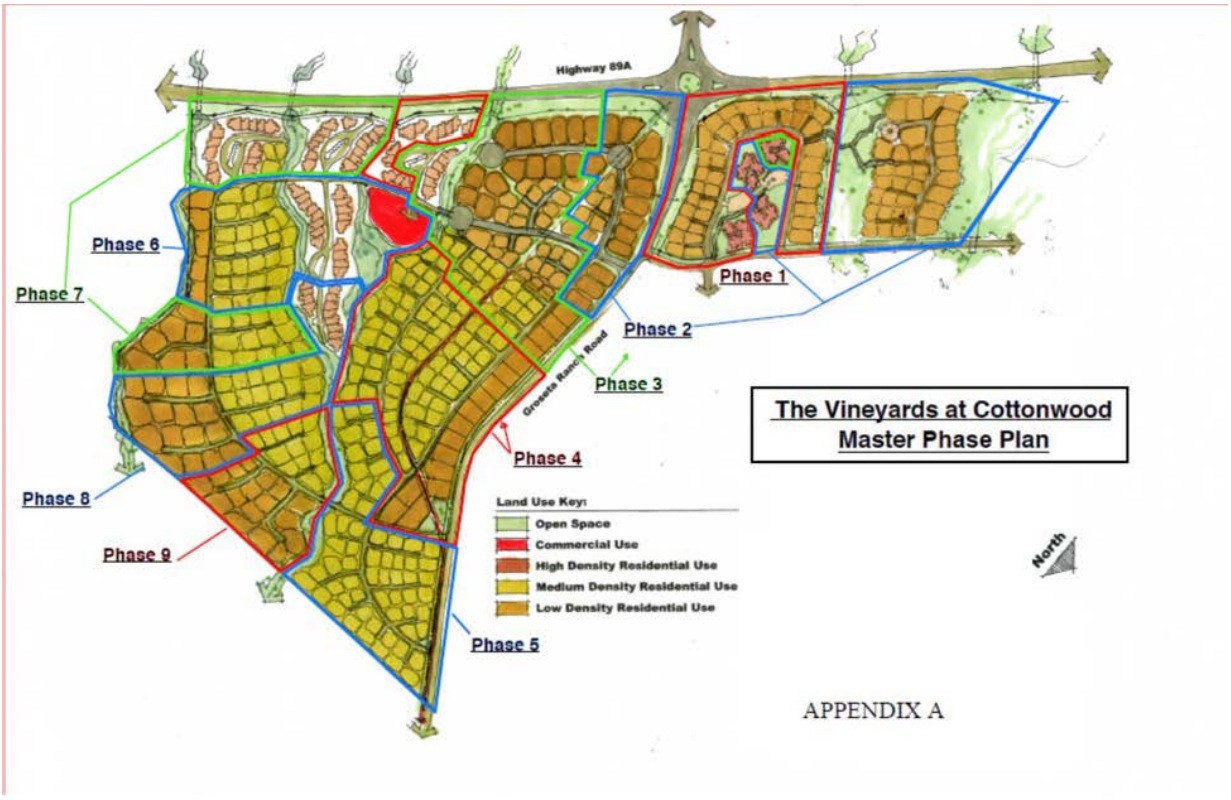
Highway 89A
Phase 1
Phase 2
Phase 3
Phase 4
Phase 5
Phase 6
Phase 7
Phase 8
Phase 9
Grosetta Ranch Road
The Vineyards at Cottonwood
Master Phase Plan
Land Use Key:
Open Space
Commercial Use
High Density Residential Use
Medium Density Residential Use
Low Density Residential Use
North

APPENDIX A

PROJECT PROPOSAL:

ZONING HISTORY BACKGROUND: *"Groseta Ranch Master Plan." 2001*

In 2001, the subject property went through an extensive public process to rezone approximately 144 acres for a mixed-use master planned development. The Planning and Zoning Commission held three public hearings on the proposal. The City Council conducted two well-attended public hearings. On November 20, 2001, the City Council approved Ordinance 408, rezoning approximately 144 acres from C-1 (Light Commercial,) R-1 (Single-Family Residential) and R-2 (Multiple-Family Residential) to PUD (Planned Unit Development) for the "Groseta Ranch Master Plan." *[All PUD later changed city-wide to PAD Zone (Planned Area Development)]*

The 2001 Groseta Ranch Master Plan included 54 acres of "Retail/Commercial," located mainly along State Route 89A, 35.5 acres of "Multi-Family Residential" on the east side of the property and approximately 9.4 acres designated as "Business Park," as well as almost 18 acres of "Open Space/Washes." A system of trails and interior roads were planned to connect to N. Main Street and the Old Town area. At that time State Route 89A was a two-lane rural highway with minimal improvements. The proposal included adding two new signalized intersections, including the realignment of Black Hills Drive to the west, two additional roadway intersections and five driveways for a total of 9 vehicle access points from the state highway to the development property.

Subsequent to the approval of the rezoning in 2001, a citizen group took steps to overturn the approval through the referendum process. The referendum failed; however, in the interim the commercial partners changed their plans and the overall project ceased to move forward. The PAD zoning for the Groseta Ranch Master Plan was never acted on. No subdivision plat was approved and no dedications were enacted. A new proposal has been submitted that includes changes in the scope of the project, the mix of uses, access from surrounding roads and interior roadway layout.

ZONING PROPOSAL: *"The Vineyards at Cottonwood" 2016*

Due to major changes to the mix of uses, design theme, street layout and access points, the Groseta Ranch PAD Zoning approved through Ordinance 408 is not applicable to the proposed development. The new proposal goes beyond the scope of the Major Amendment process. Therefore rezoning with a new Ordinance is necessary to effect the scope of changes. It is in effect a new development proposal.

PAD Zoning is established through the Master Development Plan as approved by the Ordinance. The proposed project places emphasis on residential development with a mix of housing types, including single-family residential, patio homes, and attached condominium units. The major natural drainage features bisecting the site from west to east will be preserved as open space and improved surface walking pathways will be integrated into those areas. For the initial proposal an area of several acres will be designated for potential commercial uses; however, the exact mix of commercial and residential could change with future phased development through the Amendment process.

Approximately 28.53 acres that had been part of the previous Groseta Ranch Master Plan located at the northeast corner of State Route 89A and Verde Heights Drive is not included in the revised PAD zoning proposal for the Vineyards at Cottonwood project. The property to the south at Verde Heights Drive is owned by others and development there is not part of the current proposal.

PLANNED AREA DEVELOPMENT (PAD) ZONING

Planned Area Development (PAD) zoning provides an opportunity for proposing a unique custom designed development project. In return for flexibility with zoning and development standards, the applicant is required to submit a separate Master Development Plan document that allows review of the overall proposal in a comprehensive and coordinated format, so as to allow the reviewing bodies an opportunity to determine compliance with regulatory objectives.

MASTER DEVELOPMENT PLAN

An application for PAD Zoning has been submitted in the form of a Master Development Plan (MDP). Zoning Ordinance, Section 424. PAD Zone, describes the procedures and criteria for the MDP. The MDP shall be a separate document, submitted in a ring binder format, that includes a detailed project narrative, supporting exhibits describing the proposed uses, development standards, design guidelines, project phasing data, maintenance responsibilities and other supporting documentation, as well as detailed graphic exhibits, including proposed site plan, landscape plan, building designs, and other project elements, as described in the PAD Zone section of the Zoning Ordinance.

Project Narrative:

Section 424 PAD Zone provides an outline for the project narrative, including name and contact information, project data summary and project objectives outline.

General Plan Review:

The Cottonwood General Plan supports the proposed development project at this location. Arizona Revised Statutes (ARS) § 9-462.01 F. refers to conformance with the General Plan: State Statute requires a change of zoning to be in conformance with the General Plan. The Cottonwood General Plan 2025, approved by the voters of Cottonwood on November 4, 2014, designates the Land Use classification for the subject property as Planned Development (PLD). The Planned Development (PLD) Land Use classification supports the zoning of this property with the Planned Area Development (PAD) Zoning District designation. PAD Zoning supports a master planned approach to property development and encourages quality mixed-use development with integrated open space and natural lands preservation.

In addition, the *Cottonwood General Plan 2025*, Growth Area Element identifies the subject property as a "growth area," as defined by State Statute, as follows:

Element 6. Growth Area.

The purpose of the Growth Area Element is to identify those areas most suitable for efficient, cost-effective mixed-use type of development where infrastructure, including streets, utilities and public services, is existing in relatively close proximity and where development can be accomplished in a manner that supports positive neighborhood qualities. It is the intent of this element to support the development of well-defined neighborhoods that include quality street environments, attractive

recreational facilities, integration with natural areas, and places that allow public interaction and community involvement.

This element is devoted to an examination of growth and the facilitation of an efficient pattern of land use which minimizes infrastructure costs, promotes economic development and housing needs, and encourages many of the small town qualities highlighted by the General Plan's vision. The Growth Area element encourages a focused pattern of development in those areas of the community that are most able to support such development. Efficient mixed-use development minimizes traffic and other impacts, and better enables opportunities to provide affordable housing, preserve the City's unique natural and historic amenities, open areas, backdrops, vistas, and trail opportunities. The Growth Area element also sets the stage for a pedestrian-oriented scale of development, which helps define the small town qualities that people value.

Graphic Exhibits: Planning exhibits for the MDP include:

- Site Plan
- Phase 1 Site Plan
- Topographic Map
- Phasing Plan
- Housing Elevations
- Open Space & Trail Plan.

PROPERTY DEVELOPMENT STANDARDS:

PAD Zoning allows the Applicant to propose unique standards for the project with the understanding that the project will include superior design and character. The MDP serves as the guide for documenting the unique property standards for a project. This describes typical setbacks, parcel size, open space requirements and other features for the proposed development.

Setbacks:

Collector Street:

- Front: 8 feet
- Rear: 15 feet
- Sides: 5 feet

Local Street:

- Front: 8 feet
- Rear: 15 feet
- Sides: 5 feet

Height:

Single-Family & Patio Homes:	20 feet or less
2-story Multi-Unit Condominium:	35 feet or less

PROJECT SUMMARY AND PHASING

- 7-10 year total project lifespan for build-out.
- 9 phases, each with roughly consistent mixes of single family, patio homes, and condominiums.

Total: 555 residential units

100.83 acres. Gross Density: approx. 5.5 units per acre

- Single family, Multi-family, Commercial - 68 acres
- Commercial / Mixed Use development - 2.83 acres
- Open Space - 30 acres

Community Center

3-4,000 square feet size. 2.83 acre site.
Café, small retail, meeting space, farmers' market space.

Phase 1: 46 Units

7.871 acres development area & 1.5 acres open space

- 6 single family homes
- 32 patio homes
- 8-unit multi-family condominium

Phase 1, Unit 1, residential development is located immediately to the north from the Main entrance from SR 89A at Anna's Way. A loop road provides access through Phase 1. The Patio Home configuration is located around the outside of most of the loop with some single-family parcels at one end. The interior of the loop road is the location for the four 8-plex, multi-unit condominium buildings (32 units total) with only one such condo building planned for Phase 1.

Future Phases

The proposal includes an assortment of housing types, including single-family lots with direct access to streets, patio homes located on private shared lanes, and town homes with shared parking lots in future phases. The exact configuration, mix and scope of future phases may be amended at the time of development to respond to changing market interest.

DESIGN REVIEW

Design Review includes review of design elements, architectural themes, materials, color palette and similar features. This is a required part of the PAD Zoning process that typically is included with the MDP as part of the initial review and approval. In some cases, aspects of the proposed development may be proposed for follow up review and approval of design review features by the Planning and Zoning Commission. In this case, the Vineyards project has proposed a design theme that could be continued with future development plans for areas not fully designed at this time, including the condominium multi-unit buildings, the town home development and the commercial center and community building. Various sub-areas of the project not fully designed at this stage could return to the Planning and Zoning Commission for design review at the time of proposed development. This gives the developer the flexibility to respond to changing market interests while still insuring zoning requirements are fairly applied.

Architectural Theme: Craftsman Style

The architectural theme uses a "Craftsman" influenced design style. The American Craftsman style became one of the most popular home styles over 100 years ago in the early 20th Century. The single-family residences, patio home units and multi-unit condominium residential all include elements of the Craftsman style theme. Craftsman style focused on practical design elements while still recognizing the quality of handcrafted workmanship.

Craftsman homes typically have low-pitched roof lines with gabled or hipped roofs, deeply projecting overhanging eaves, open front porches beneath extensions of the main roof, exposed rafters or decorative brackets under the eaves, tapered, square columns supporting the porch roof, multi-pane double-hung windows, hand-crafted stone, woodwork and metal details, and mixed materials throughout the structure. Roof details often have decorative "knee brace" features or long exposed "rafter tails." Exterior walls often were finished with wood shingles or exposed horizontal ship lap siding. Craftsman style may have exposed natural material details, such as wood or stone, in a natural state. Craftsman homes may include a range of colors, such as green, yellow and blue, but with a more "earthy" tone and hue. Accent colors also provide a strong part of the composition and may range from muted neutrals to warm bright colors.

The proposed theme for The Vineyards at Cottonwood development uses the Craftsman style as a basis for the design as applied to contemporary construction techniques. The design style is adaptable to different types of buildings so the overall master planned community would have a unified theme with variation.

Building Types:

SINGLE-FAMILY RESIDENTIAL:

- 1,600 – 2,000 square feet
- 7,000 sq.ft. Lot Size
- Covered Porches, 2-car Garage

Phase 1 development includes 6 Single-Family Residential (SFR) homes on separate larger lots with direct driveway access to the local street. The house designs include the Craftsman style features.

PATIO HOMES:

- 1,100 – 1,400 sq.ft.
- 4,000 sq.ft. Lot Size
- 2-car Garage
- Shared Common Private Driveway maintained by HOA.

Phase 1 incudes clusters of four (4) homes accessed by a shared driveway. Eight (8) such clustered areas are proposed for a total of 32 Patio Homes. Lots are generally smaller than the SFR homes but the orientation provides greater opportunity for neighborhood interaction. Home designs also include the Craftsman style design elements, colors and materials.

MULTI-UNIT RESIDENTIAL CONDOMINIUM

- 8-unit, 2-story buildings
- 1,000 – 1,200 sq.ft. units
- 2 – 3 bedroom units
- Shared Parking Lots & Covered Parking
- Common shared site amenities

Phase 1 includes one 8-plex condominium structure is proposed to be located in the interior of the looped roadway. The design style is also Craftsman influenced with low pitched gable roof details, multi pane window details, mixed natural elements and intricate design details. Final site plan for the condominium area, including parking lots, pedestrian walkways, site amenities and landscaping will be provided prior to the approval of construction permits for the area.

TOWN HOME:

- 1,100 – 1,259 square feet units
- 4,000 sq. ft. lots with shared parking lots
- With Phases 3, 6, 7 & 8
- Located in proximity to Community Center
- Common Wall and Garage

The town home or attached row house is indicated to be included with several future phases. Detailed architectural and site development plans would be required to come back to the Planning and Zoning Commission for future Design Review prior to submittal of construction plans for any part of the town home development.

Site Layout

The main theme of the site layout show a series of sub-area neighborhood residential areas defined by looped roods and short "hammer head" streets (similar to cul-de-sac) separated into larger sub-areas defined by the legs of the natural drainage washes bisecting the site. A hierarchical street classification system further organizes the site layout with collector streets providing the main framework, local streets, including hammer-heads, providing direct access to properties, and a system of shared private driveways generally serving clusters of four patio homes.

Screening/Buffering:

The Zoning process provides an opportunity for ensuring there is adequate separation between different types of uses and different intensity of activity. Screening and buffering is intended to provide adequate protection and transition between such uses in the form of walls, fences, earthen berms, landscaping, distance and similar features.

In this case, residential development is proposed to back up along State Route 89A. The screening is proposed to be a landscape hedge located between the homes and the state highway. The shrubs are Red Tip Photinia, which can grow to 10 feet or greater. Stone columns will be installed in line with the hedge every 150 feet.

Lighting:

In general, Dark Sky lighting objectives are supported by the Cottonwood Lighting Code. This includes ensuring lamp elements are designed to be shielded below the horizon line where the lamp element is not visible below a horizontal line of the fixture. In addition, the total light output, measured in lumens per acre, is calculated. Lumens are the factory designated output for various types of lamps. Also, operational times of the use for different activities may be applicable.

Single-family residential homes in Cottonwood are typically not subject to the outdoor lighting code; however, for a Planned Area Development, the lighting code can be applied to the entire development. This includes not only commercial, institutional and governmental uses but also residential for the overall project. Standards can be set to ensure all outdoor lighting meets dark sky objectives. In this case, compliance with lighting code standards will be addressed through the future design review of detailed plans for sub-areas and housing types.

Signage:

Development identification signage is proposed at the Groseta Ranch Road entrance. Any other special project signs within the development proposed at future time will be subject to design review.

CIRCULATION STANDARDS:

Existing streets include Groseta Ranch Road, providing access from the roundabout on State Route 89A, and Anna's Street connecting Groseta Ranch Road to On the Greens development. A local street connection is also shown to the east connecting to the exiting Ocotillo Street.

Access and Driveways:

Primary access is indicated as the roundabout at SR 89A and Groseta Ranch Road. Any additional proposed access points from State Route 89A would need to be coordinated with ADOT. On March 15, 2016, the City Council approved Resolution Number 2831 accepting dedication of right-of-way for the proposed continuation of the north potion of Groseta Ranch Road connecting to a point on N. Main Street above Old Town. Groseta Ranch Road has been shown for many years as a collector street between SR 89A and Main Street on the City's street plan and is also indicated on the Cottonwood General Plan Circulation Element. This also fits into the developer's interest in providing direct access to the Old Town area as a valued amenity.

Interior Circulation:

The project includes collector streets, local streets and private access ways. The plan also includes provisions for pedestrian and bicycle circulation.

Traffic Impact Study:

Zoning Ordinance, Section 424. PAD Zoning indicates that a Traffic Impact Study (TIS) is required for residential development with 50 or more units proposed. In this case, Phase 1 includes less than 50 residences. The applicant will be required to produce a TIS for the entire project, including Phase 1, at the time the total number of dwelling units exceeds 50 for the overall project. It would be expected to be included as part of the Phase 2 development.

OPEN SPACE STANDARDS:

PAD Zoning requires open space features as an integrated component of a quality master planned community. The ordinance describes open space as both natural and developed areas.
Approximately 30% of the overall site (or 30 + acres) is proposed as open space, including the natural drainage washes.

Drainage and Washes.

The project includes three major drainages bisecting the site generally from west to east. The north wash is a FEMA designated flood zone know as Mescal Gulch. The other two washes primarily serve as local drainage features for the lower hillsides to the west. Identification and preservation of washes and major drainage features in their natural condition is the preferred approach.

Parks and Community Use Areas

The preservation of the natural drainage features provides area for integration of walking pathways. Access to open space areas is relatively close to all sections of the development.

Trails and Pathways.

The goal of including walking trails in and around planned developments is described in the MDP outline. Appropriate surface material and design specifications should be identified in the MDP. The design standards for non-motorized, shared-use pathways should be submitted for review including surface material, width and street intersection details. Final design plans should be submitted for review prior to submittal of related construction permits.

LANDSCAPE PLAN:

The Landscape Ordinance was revised in 2009 to ensure required landscape plans focus on the use of drought-tolerant, low-water use plants. The landscape ordinance identifies riparian versus hillside plant varieties, and performance based design that ensures a distribution of plants through a site, including street corridor, parking lot and building area landscaping.

The Plant List in the Cottonwood Zoning Ordinance is proposed as the source of potential plants for the development. It is standard to provide detailed landscaping plans for commercial and multi-unit residential development as part of the Design Review process. Since the future phases of this project have not been fully designed due to allowing flexibility to respond to market direction, it is recommended to require that complete landscape plans be submitted to the Planning and Zoning Commission at a later date as part of the Design Review process for multi-unit residential, town homes, commercial and community facility uses.

WATER PLANNING

PAD Zoning requires a preliminary study of water, sewer and drainage so as to ensure there is adequate system capacity for the proposed development. The water adequacy issue was legally determined in 2009 through a process of working with the Arizona Department of Water Resources (ADWR) to provide a “Designation of Adequate Water Supply” for Cottonwood. Questions of reliability are inevitable for any study; however, this designation provides a legal and procedural framework for these issues.

Statement of Water Use:

Recognizing the importance of having a sustainable supply of water, the City of Cottonwood in 2009, obtained from the Arizona Department of Water Resources (ADWR) a "Designation of Adequate Water Supply" for 6,000 acre-feet of water annually, which is more than twice the volume of groundwater pumped in 2013. In order to obtain this designation, the City demonstrated to ADWR that 6,000 acre-feet of groundwater will be continuously available to be pumped from the aquifer for 100 years without causing the groundwater table to decline below a statutorily defined limit. By becoming a Designated Adequate Water Provider, all proposed subdivisions within the City's service area are designated as having a sustainable supply of water to meet their needs. Developers are not required to submit a separate hydrologic study to ADWR, as the city-wide designation covers this requirement.

Water Conservation Plan:

The Zoning Ordinance allows PAD projects an opportunity to waive the dual plumbing gray water requirement for individual residences in return for meeting water conservation objectives through a program that includes features, such as low-water use plumbing fixtures, drought-tolerant landscaping, and use of reclaim water.

DEVELOPMENT PHASING PLAN:

The project is proposed to be developed in Phases. The first phase includes residential development located northeast of the main project entry point at Groseta Ranch Road and SR 89A. The requirements for phased infrastructure development, including roads, water lines and wastewater systems, are determined by applicable departments based on system requirements. In some cases, extended infrastructure will need to be installed in the first phase so as to meet operational or system requirements.

Phase 1 includes 46 dwelling units located at the northeast corner of SR 89A and Groseta Ranch Road. This includes 6 single-family home lots, 32 patio home units which are designed with 4 homes around a shared private lane, and 1 multi-unit 8-plex condominium structure. There will be three (3) model homes built in Phase 1.

SUBDIVISION:

The subdivision platting process is guided by the City's Subdivision Ordinance. Subdivision is done through a separate application process that is reviewed and approved by the Planning and Zoning Commission and City Council. The Zoning approval for the proposed Planned Area Development project must be obtained first with Subdivision of land to follow.

Condominium:

"Condominium" means real estate, portions of which are designated for separate ownership and the remainder of which is designated for common ownership solely by the owners of the separate portions. Real estate is not a condominium unless the undivided interests in the common elements are vested in the unit owners. As such, condominium development is created through the subdivision platting process. A separate Plat is required for any proposed condominium use.

RECOMMENDED STIPULATIONS:
If approved, staff recommends the following stipulations:

1. That the project conforms to the comments from the Code Review Board meeting of March 15, 2016.

2. That the project conforms to the Master Development Plan (MDP) as submitted. There shall be no more than 555 residential dwelling units provided for the complete project.

3. That the project conforms to comments received from the Fire & Medical Department dated June 28, 2016.

4. That the project conforms to the comments from Engineering Department dated July 8, 2016.

5. That the project conforms to the requirements of the Utility Department regarding installation of water and sewer improvements, including timelines, scheduling, standards and fees.

6. That the project conforms to the requirements of the Public Works Department regarding grading and drainage plans, stormwater management and street engineering.

7. A Traffic Impact Study (TIS) shall be submitted with Phase 2 plans, to be approved by staff and ADOT. All streets shall be built to City standards.

8. Indicate one (1) foot vehicular non-access easements for detached single-unit residential parcels abutting designated collector streets.

9. All site grading activity shall be subject to City requirements for dust control, including use of treated effluent for dust suppression.

10. For trails that are located along drainage washes, locate the trail tread along the top of slope and not within the floodway or drainage bottom. Indicate that trails shall be located within open space tracts or designated public access easements; and that the homeowners association shall maintain all park, open space and trail improvements.

11. The developer shall be required to submit all required future plans to the Planning and Zoning Commission for Design Review for all areas and features not included as part of the Master Development Plan, including any condominium development, multi-unit residential, town homes, commercial uses, community facilities, parks and trails, and project signs, as well as any additional or modified site features or building designs.

12. Provide landscape plans, as per Zoning Ordinance Section 407, for areas and uses subject to design review. Indicate that the homeowners association shall be responsible for maintaining the landscaping in public right-of-ways and other areas as proposed.

13. All public infrastructure (streets, water, sanitary sewer, storm drainage, reclaimed water, etc.) shall be constructed in accordance with the current edition of the Maricopa Association of Governments, Uniform Standard Details for Public Works Construction, Maricopa Association of Governments, Uniform Standard Specifications for Public Works Construction, Article 6 of the City of Cottonwood Subdivision Ordinance (06/07/OS) and generally accepted engineering principles. Additional requirements may be required at the discretion of the City of Cottonwood Engineer.

14. Drainage improvements shall be designed in accordance with the Drainage Design Manual for Yavapai County and City Ordinances 172 & 615. Additional requirements may be required at the discretion of the City of Cottonwood, Engineer.

15. Public roads shall be a minimum of 30' wide back of curb to back of curb. Streets with a width less than 30' back of curb to back of curb shall be considered to be private streets and will not be publically maintained. If a street width of less than 30' back of curb to back of curb is desired, the minimum width shall be dictated by the requirements set forth by the City of Cottonwood Fire Department.

16. No parking will be allowed on any streets that are 20’ wide. Parking on one side of the road will be allowed on streets that are 26’ wide, except where Fire Hydrants are located.

17. All road/street heights, widths, cul-de-sac and hammerhead turn around distances shall meet the requirements in the 2012 International Fire Code appendix D and the City of Cottonwood conditions.

18. A secondary approved temporary access road shall be installed before phase II construction is started. A permanent approved collector street accessing North Main Street shall be installed and fully accepted by the City of Cottonwood before phase II is 25% completed.

19. Time is of the essence for the construction of Groseta Ranch Road north to Main Street. Construction of the roadway extension shall be started as soon as practicable ensuring that the road is completely constructed and accepted by the City of Cottonwood no later than March 1, 2020.

20. At the gated entrance to the On the Greens subdivision, from Anna’s Ave., the Cottonwood Fire and Medical Department has an emergency vehicle preemption signal device on the coded gate system that requires a clear visible path from Groseta Ranch Road in order to operate correctly. Please coordinate any future placement of trees and shrubs within this corridor that may prevent this device from working correctly.

21. The Developer shall dedicate an Avigation Easement to the City of Cottonwood due to subject property's proximity to the Cottonwood Airport. This easement shall be identified on the subdivision plat.

22. A Certificate of Zoning Compliance documenting the completion of conditions of approval as specified by the Master Development Plan shall be issued prior to approval of any Certificate of Occupancy for the project. A Certificate of Zoning Compliance may be issued for individual Phases, as defined in the MDP.

23. The change of zoning shall remain in effect for three (3) years from the effective date of approval of the Ordinance by City Council. If at the expiration of this period the property has not been improved for the use for which it was conditionally approved, the City Council, after notification by certified mail to the owner and applicant who requested the rezoning, shall schedule a public hearing to take action to extend the approval period or cause the property to revert to its former zoning classification. The City Council may consider extending the rezoning for up to two (2) additional years where the applicant provides sufficient information to the City prior to the hearing to allow the City Council to make a determination that the applicant intends to proceed with the project within the approved timeframe.

24. Any other stipulations the Planning & Zoning Commission deems necessary.

Commissioner Narwid had some questions regarding the phasing and how it was being proposed, his concern was that there are nine (9) phases; within phase one (1) there are parts of both phase two (2) and phase (3); there is flexibility with a Planned Area Development (PAD) but to what extent, and is it normal for a PAD. Staff responded that the PAD ordinance is special, it does allow for flexibility in return for a superior project and quality design, also, specific to this request is that they are putting a limit on the number of homes being built; the PAD ordinance allows the applicant to look at the gross density and calculate the allowable housing, which in this case would be more then what is presented tonight of 555 homes. Commissioner Narwid also asked who had the rights to Groseta Ranch Road, and who is responsible for improving it. Staff responded that it is a requirement of the development to improve the road. Commissioner Wasden agreed with Commissioner Narwid, likes what is here on paper in front of us, however, the details and setbacks tell a different story of what the development is actually going to look like. Commissioner Poslaiko shared the same concerns with Commissioner Wasden that while it looks good on paper there are small setbacks proposed and it looks like conventional garages that all face out toward the street. Staff responded that there are four (4) different types of housing that are laid out somewhat differently. Commissioner Poslaiko responded thematically they will all be craftsman style homes. Vice Chairman Williams mentioned that tonight's approval is only for the rezone of the land, that tonight is not approval of the preliminary plat, the applicant will still need to come back to the Commission for a plat review of phase one (1). Commissioner Narwid asked the applicant why not build all the condominiums in phase one (1) instead of breaking it up into three (3) phases. Applicant responded that unfortunately for this town and due to the recession we cannot put our thumb on what the City needs, we offer three different projects (patio homes, single family residences, and condominiums) in order to see what sells and what doesn't, if we sell more single family residences because that is the demand for Cottonwood then we want to build more single family homes then patio homes, or condominiums. Commissioner Narwid asked what happens to the vacant land where the condominiums are for phases two (2) and three (3). Applicant responded that they will have to re-plat it or make it open space. Commissioner Wasden mentioned that his biggest concern is the traffic, and concerns regarding the actual space of the lots and the setbacks. Applicant responded that the lots where there will be single family residences will have a 30% lot coverage, the patio homes will be 28-30% lot coverage, and we will have a traffic study completed by phase two (2). Commissioner Wasden let the applicant know some of the things they may want to address when they come back for their plat approval.

Motion: ***To recommend approval of Z 16-002 Vineyards at Cottonwood to the City Council with the following stipulations:***

1. ***That the project conforms to the comments from the Code Review Board meeting of March 15, 2016.***

2. ***That the project conforms to the Master Development Plan (MDP) as submitted. There shall be no more than 555 residential dwelling units provided for the complete project.***

3. ***That the project conforms to comments received from the Fire & Medical Department dated June 28, 2016.***

4. ***That the project conforms to the comments from Engineering Department dated July 8, 2016.***

5. ***That the project conforms to the requirements of the Utility Department regarding installation of water and sewer improvements, including timelines, scheduling, standards and fees.***

6. ***That the project conforms to the requirements of the Public Works Department regarding grading and drainage plans, stormwater management and street engineering.***

7. ***A Traffic Impact Study (TIS) shall be submitted with Phase 2 plans, to be approved by staff and ADOT. All streets shall be built to City standards.***

8. ***Indicate one (1) foot vehicular non-access easements for detached single-unit residential parcels abutting designated collector streets.***

9. ***All site grading activity shall be subject to City requirements for dust control, including use of treated effluent for dust suppression.***

10. ***For trails that are located along drainage washes, locate the trail tread along the top of slope and not within the floodway or drainage bottom. Indicate that trails shall be located within open space tracts or designated public access easements; and that the homeowners association shall maintain all park, open space and trail improvements.***

11. ***The developer shall be required to submit all required future plans to the Planning and Zoning Commission for Design Review for all areas and features not included as part of the Master Development Plan, including any condominium development, multi-unit residential, town homes, commercial uses, community facilities, parks and trails, and project signs, as well as any additional or modified site features or building designs.***

12. ***Provide landscape plans, as per Zoning Ordinance Section 407, for areas and uses subject to design review. Indicate that the homeowners association shall be responsible for maintaining the landscaping in public right-of-ways and other areas as proposed.***

13. ***All public infrastructure (streets, water, sanitary sewer, storm drainage, reclaimed water, etc.) shall be constructed in accordance with the current edition of the Maricopa Association of Governments, Uniform Standard Details for Public Works Construction, Maricopa Association of Governments, Uniform Standard Specifications for Public Works Construction, Article 6 of the City of Cottonwood Subdivision Ordinance (06/07/OS) and generally accepted engineering principles. Additional requirements may be required at the discretion of the City of Cottonwood Engineer.***

14. ***Drainage improvements shall be designed in accordance with the Drainage Design Manual for Yavapai County and City Ordinances 172 & 615. Additional requirements may be required at the discretion of the City of Cottonwood, Engineer.***

15. ***Public roads shall be a minimum of 30' wide back of curb to back of curb. Streets with a width less than 30' back of curb to back of curb shall be considered to be private streets and will not be publically maintained. If a street width of less than 30' back of curb to back of curb is desired, the minimum width shall be dictated by the requirements set forth by the City of Cottonwood Fire Department.***

16. ***No parking will be allowed on any streets that are 20' wide. Parking on one side of the road will be allowed on streets that are 26' wide, except where Fire Hydrants are located.***

17. ***All road/street heights, widths, cul-de-sac and hammerhead turn around distances shall meet the requirements in the 2012 International Fire Code appendix D and the City of Cottonwood conditions.***

18. ***A secondary approved temporary access road shall be installed before phase II construction is started. A permanent approved collector street accessing North Main Street shall be installed and fully accepted by the City of Cottonwood when 100 homes are completed.***

19. ***Time is of the essence for the construction of Groseta Ranch Road north to Main Street. Construction of the roadway extension shall be started as soon as practicable ensuring that the road is completely constructed and accepted by the City of Cottonwood no later than March 1, 2020.***

20. ***At the gated entrance to the On the Greens subdivision, from Anna's Ave., the Cottonwood Fire and Medical Department has an emergency vehicle preemption signal device on the coded gate system that requires a clear visible path from Groseta Ranch Road in order to operate correctly. Developer shall coordinate any future placement of trees and shrubs within this corridor that may prevent this device from working correctly.***

DRAFT

21. The Developer shall dedicate an Avigation Easement to the City of Cottonwood due to subject property's proximity to the Cottonwood Airport. This easement shall be identified on the subdivision plat.

22. A Certificate of Zoning Compliance documenting the completion of conditions of approval as specified by the Master Development Plan shall be issued prior to approval of any Certificate of Occupancy for the project. A Certificate of Zoning Compliance may be issued for individual Phases, as defined in the MDP.

23. The change of zoning shall remain in effect for three (3) years from the effective date of approval of the Ordinance by City Council. If at the expiration of this period the property has not been improved for the use for which it was conditionally approved, the City Council, after notification by certified mail to the owner and applicant who requested the rezoning, shall schedule a public hearing to take action to extend the approval period or cause the property to revert to its former zoning classification. The City Council may consider extending the rezoning for up to two (2) additional years where the applicant provides sufficient information to the City prior to the hearing to allow the City Council to make a determination that the applicant intends to proceed with the project within the approved timeframe.

Made by: ***Vice Chairman Williams***
Second: ***Commissioner Wasden***
Vote: ***Unanimous***

DISCUSSION ITEMS (NONE)

INFORMATIONAL REPORTS AND UPDATES

There was a brief update/discussion in regards to the following, no action was taken, and these were only for informational purposes.

1. 3 Kings Kasbar
2. Hippie Emporium
3. Vacation Rentals
4. Rendezvous Square
5. Resignation of Commission Ray Cox

ADJOURNMENT

Meeting adjourned at 8:46 p.m.

DRAFT

STAFF MEMO

TO: Planning and Zoning Commission

FROM: Jim Padgett, Planner

THROUGH: Berrin Nejad, Community Development Manager

HEARING DATE: August 15, 2016

PROJECT NUMBER: **PCU 16-008 Mesquite Hills Special Directional Sign**

Approval of a Conditional Use Permit is requested to allow the placement of a Special Directional Sign on property located at 585 W State Route 89A along the North Side of State Route 89A between Mingus Avenue and Candy Lane zoned C-1 (Light Commercial.) The proposed sign is located on APN 406-33-131Q.

PROJECT DATA AND FACTS:

Applicant/Agent	John Alvey
Property Owner	Verde Valley Medical Center
Location of Property	585 W. State Route 89A. Assessor Parcel Number 406-33-131Q, located on the North side of State Route 89A between Mingus Ave and Candy Lane.
Present Zoning and Land Use	C-1 (Light Commercial) Currently vacant land.
Description of Applicant's Request	To locate a Special Directional Sign for the Mesquite Hills Subdivision.

LAND USE:

Description and Character of Surrounding Area
The site is currently vacant and is generally surrounded mostly by vacant land, some medical facilities, industrial properties and other retail uses along State Route 89A.

Adjacent Land Uses and Zoning	
North:	PAD – Vacant lot.
South:	C-2 (Heavy Commercial) Bank and vacant lot across State Route 89A
East:	PAD – Vacant land and medical offices.
West:	C-2 – Vacant parcel and Gas station

PROJECT PROPOSAL:

Background:
The property is presently vacant and is along State Route 89A in the vicinity of Mingus Avenue which is a main access to the Mesquite Hills subdivision currently being developed. The request for the sign is to allow for traffic to have better directional information to go to the subdivision as they travel along State Route 89A.

The existing C-1 zoning of the property allows for consideration of a Conditional Use Permit for the location of a Special Directional Sign by the City of Cottonwood Zoning Code Section 405.G.9.

STRUCTURAL DESIGN:

The proposed sign would be 40 square feet in area being a 5' by 8' sign placed on two block columns covered in a stone veneer. The overall height of the sign would be 10' which is the maximum permitted by code.

See the attached color rendering and finish details submitted by the applicant.

REQUIRED FINDINGS:

A Conditional Use Permit shall only be granted if the approving body determines that the project conforms to the required findings in this Section. (*Zoning Ordinance, Section 302*.) If it is determined that it is not possible to confirm the required findings for the proposed CUP, whether as submitted or through conditions that may be required, the application shall be denied. The specific basis for any decision shall be established in the record as findings of fact. The following criteria shall be considered as the basis for the findings to approve, approve with conditions or deny the Conditional Use Permit:

General Findings:
The placement of a Special Directional sign is a permitted use with a Conditional Use Permit.

Compatibility with Surroundings Uses:
The location of this proposed Special Directional sign located along State Route 89A 89A is compatible with the surrounding land uses and zoning.

Traffic and Circulation:

No traffic will be generated at the proposed sign location.

Infrastructure:

N/A

Nuisance Activities:

No nuisance activities have been identified at this location for the existing or proposed use.

Buffering and Screening:

No additional buffering or screening is required.

Stipulations:

A Conditional Use Permit is necessary to locate the Special Directional sign on this C-1 property. If approved, staff recommends the following stipulations:

1. That the project is developed in conformance with the development plans submitted for the August 15, 2016 Planning and Zoning Commission meeting, and as may be further modified by the Planning and Zoning Commission.

2. A sign permit shall be applied for, and approved by staff, within six (6) months from the date of approval by the Planning & Zoning Commission or the Conditional Use Permit shall be subject to revocation procedures.

3. That the Special Directional sign be granted for a period of 5 (five) years or a time as specified by the Planning Commission.

4. A Certificate of Zoning Compliance documenting the completion of Conditional Use Permit conditions shall be issued upon completion of the sign as presented.

5. Any other stipulations the Planning & Zoning Commission deems necessary.

6. That the Special Directional sign comply with all requirements of Section 405.G.9 of the City of Cottonwood Zoning Code.

7/21/16

LETTER OF INTENT

The objective having the off premise Mesquite Hills sign is primarily based on those who have interest in the Mesquite Hills subdivision area who for the majority are from outer locations and are not familiar with the Cottonwood area. Many potential buyers/lookers have expressed that they have gone beyond the intersection to turn west on Mingus Ave while traveling on 89A and are several roundabouts beyond in the northern direction before they realize they have gone passed it. Having the temporary sign in place certainly will be advantageous to those of interest and especially would lessen any potential traffic hazzards that could occur while driving and being in search of their destination.

Mesquite Hills is designed to eventually capacitate 400+ homes. Currently, 50 homes have been built and with the housing industry making a recovery, future homes sales are and will be on the rise, once again, bringing more potential buyers/onlookers to our area for their first time in search of their destination.

Such a temporary sign as what is being proposed, not only brings an easier means of destination to those of interest with the Mesquite Hills area, allows the traffic on the 4 lane 89A which is an integral part of the thoroughfare to Mingus Ave, a lesser chance of traffic accidents.

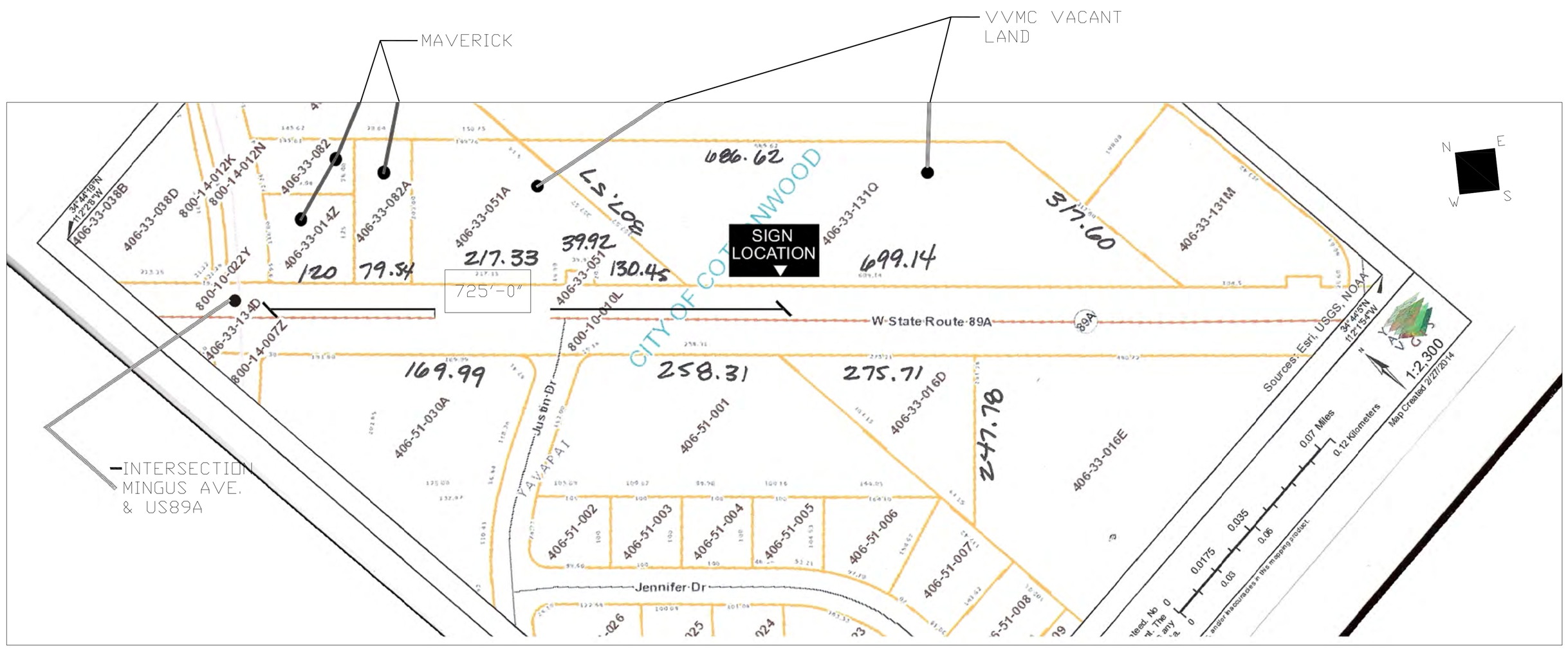

VICINITY SKETCH
SCALE: 1" = 100'

SITE PLAN NOTES

1) MESQUITE HILLS SIGN SITE PLAN

2) ACESSOR PARCEL NUMBER 406 33 131Q

3) PROJECT CONTACTS:

JOHN ALVEY	JAMES BORDENAVE PE
ALVEY SIGNS	J&J ENGINEERING
PHONE: 928-300-4024	PHONE: 520-827-1293
EMAIL: alveysigns@gmail.com	EMAIL: engineeredbyjandj@gmail.com

4) REVISION NUMBER 0, JULY 15, 2016

5) THE CONTRACTOR IS REQUIRED TO VERIFY THE PRESENCE AND EXACT LOCATION OF ALL UTILITIES PRIOR TO COMMENCING ANY EXCATION WORK PURSUANT TO THIS CONTRACT.

6) PROVIDE ALL PERMITS REQUIRED BY GOVERNMENT AGENCIES HAVING STATUTORY JURISDICTION OVER THE FACILITIES AND NATURAL FEATURES FOUND ON THE PROJECT SITE AND WHICH WILL BE AFFECTED BY THE WORK OF THIS PROJECT.

7) STAGING AREA SHALL BE LOCATED ON-SITE WHERE DIRECTED

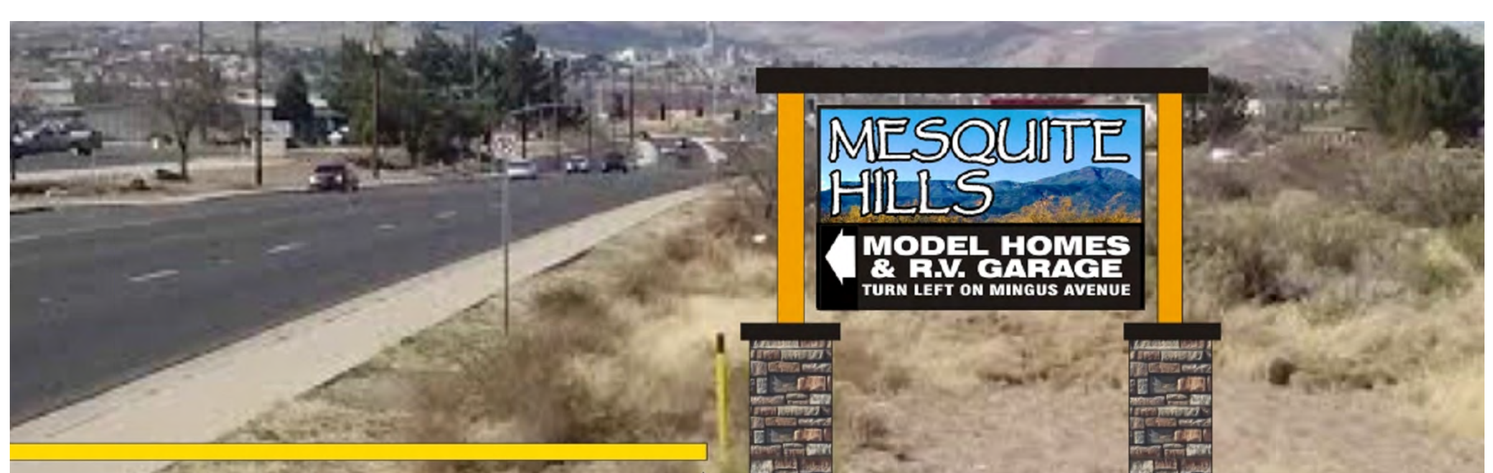

50'-0" MINIMUM DISTANCE
TO CENTERLINE OF US89A
PER ADOT OUTDOOR ADVERTISING
CONTROL R17-3-701

PARCEL SKETCH
NOT TO SCALE

REFERENCES		REFERENCES		REVISIONS			
DWG. NO.	TITLE	DWG. NO.	TITLE	NO.	BY	DATE	DESCRIPTION

ALVEY SIGNS 634-5715

J&J Engineering and Design Inc.
Phone: (520) 827-1293

	YES	NO		
MANUAL CHANGES MADE			DRAWN BY:	
DWG. FILE UPDATED			ENGINEERED BY:	
PLOT UPDATED			CHECKED BY:	
			PROJ MGR:	
			APPROVED BY:	

MESQUITE HILLS
COTTONWOOD, AZ 86326

SITE PLAN

ISSUED FOR CONSTRUCTION
APPROVED _____ DATE _____

SCALE SPECIFIED
REVISION 0
JOB NO. 16-002
DRAWING No: SP-1

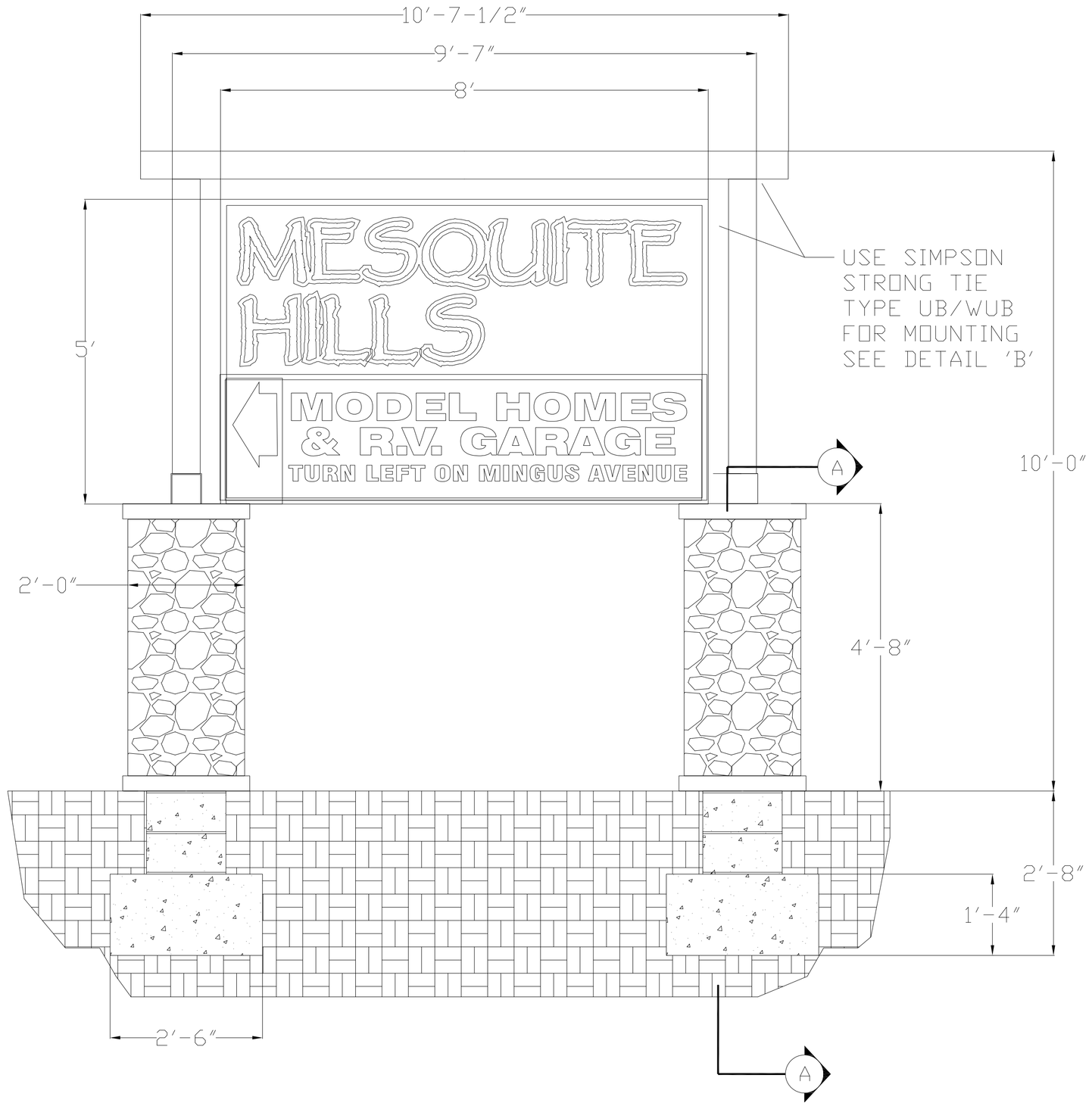

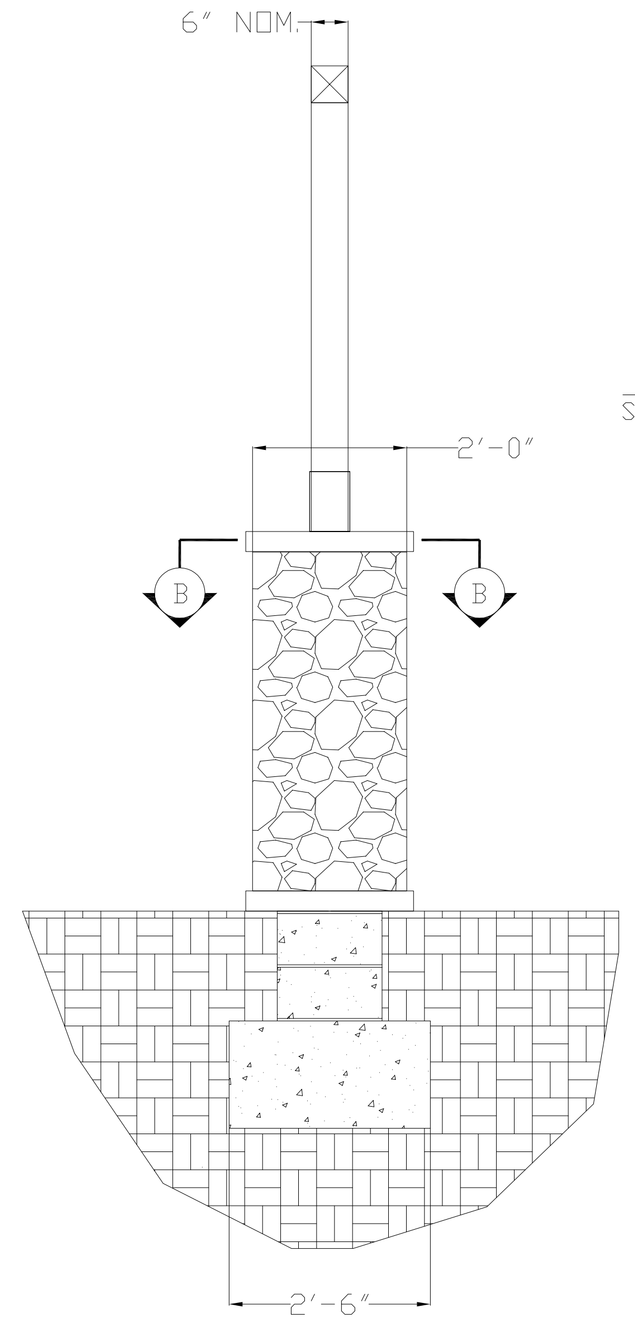

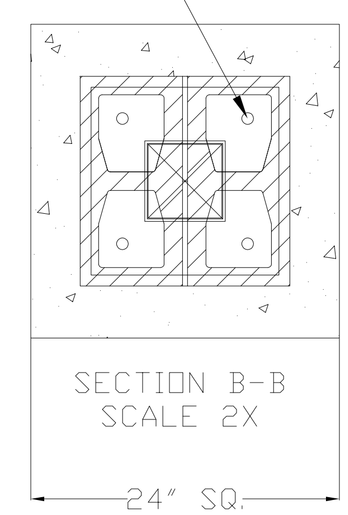

SECTION B-B
SCALE 2X

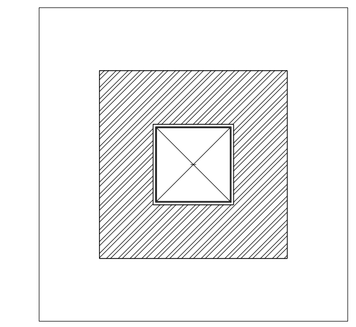

TOP VIEW

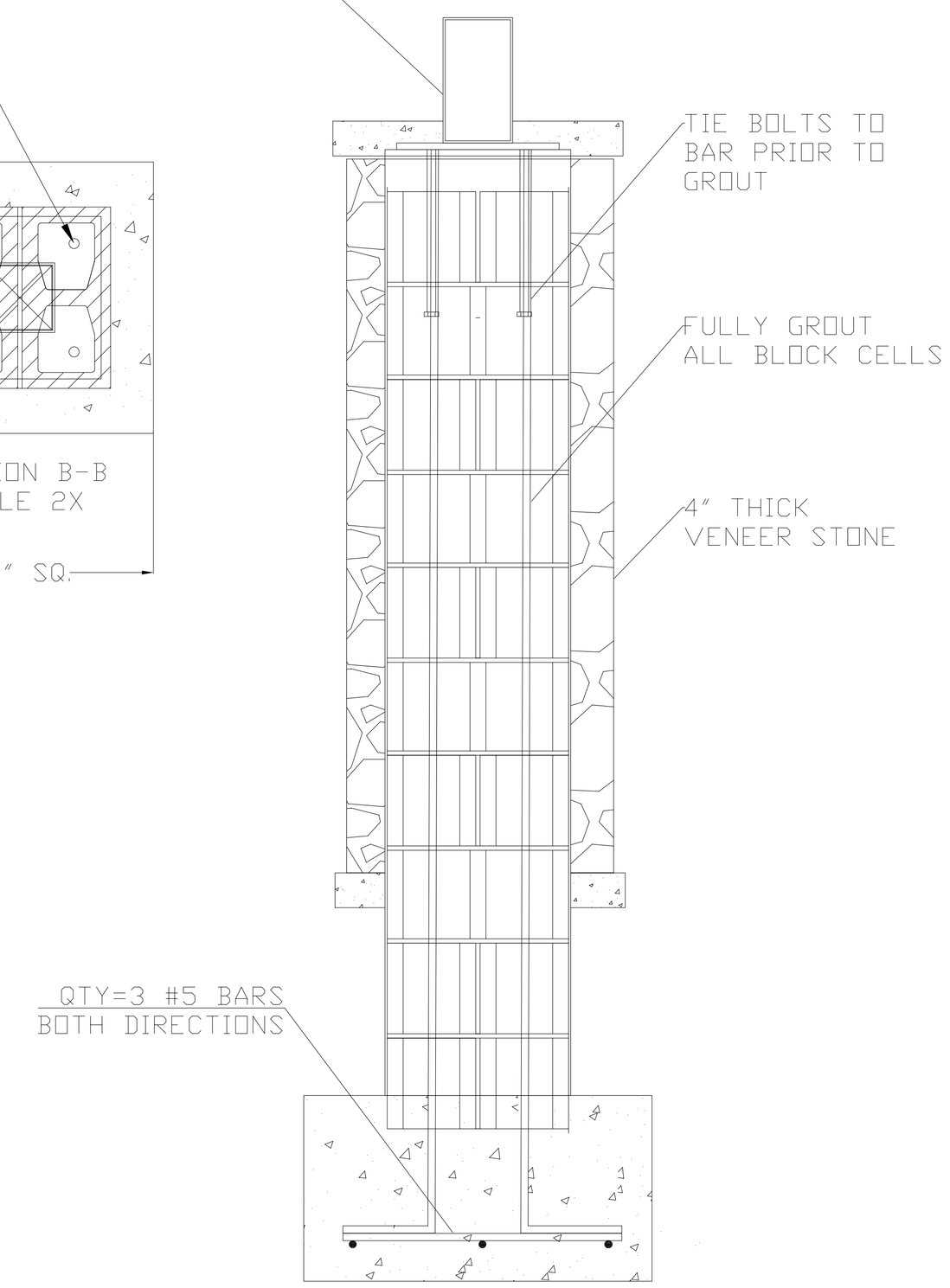

SECTION A-A
SCALE 2X

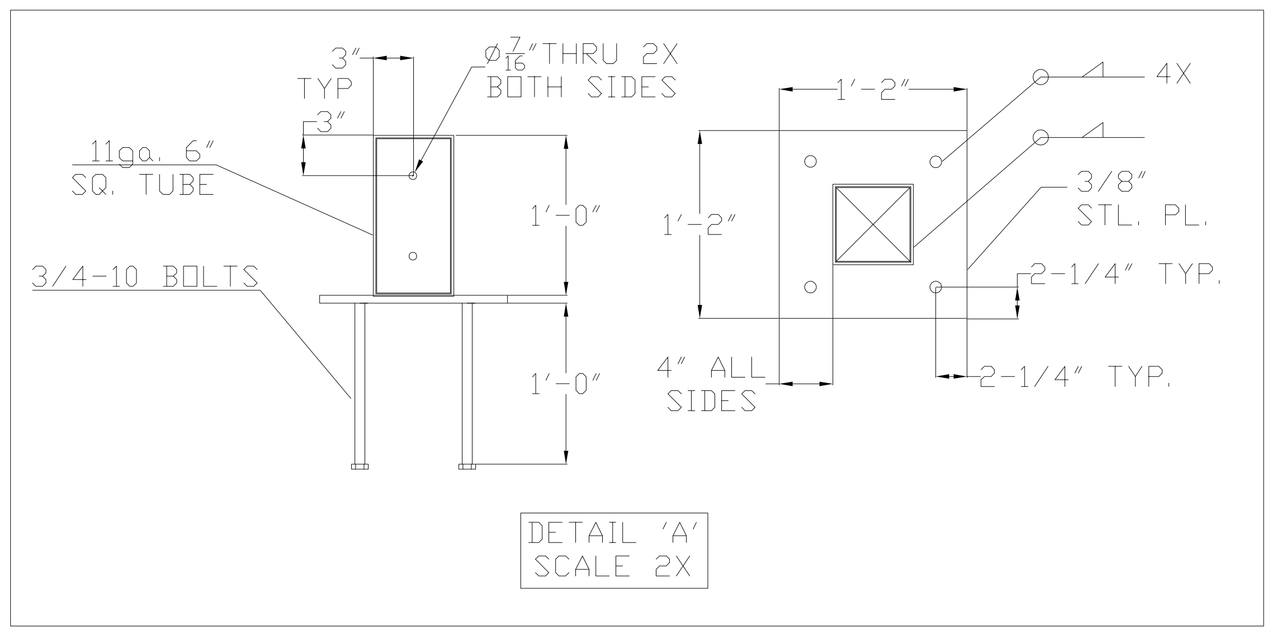

DETAIL 'A'
SCALE 2X

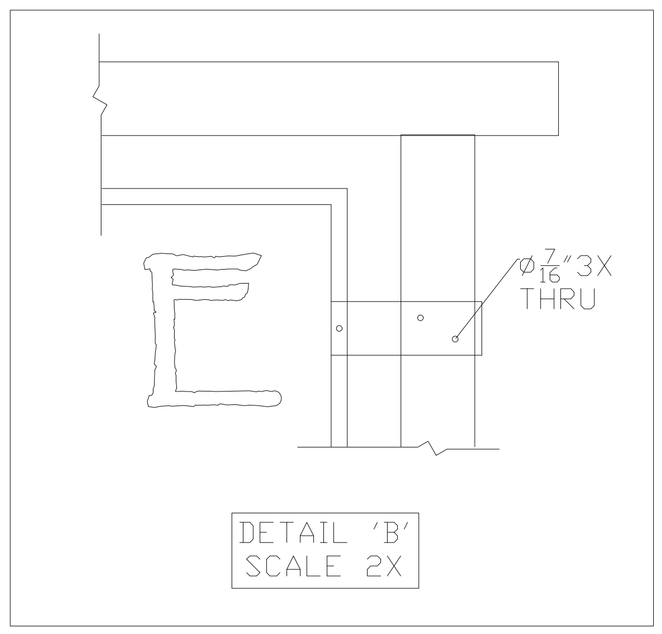

DETAIL 'B'
SCALE 2X

SCALE: 3/4"=1'-0"

REFERENCES		REFERENCES		REVISIONS			
DWG. NO.	TITLE	DWG. NO.	TITLE	NO.	BY	DATE	DESCRIPTION

ALVEY SIGNS 634-5715

J&J
Engineering and Design Inc.
Phone: (520) 827-1293

	YES	NO		
MANUAL CHANGES MADE			DRAWN BY:	
			ENGINEERED BY:	
DWG. FILE UPDATED			CHECKED BY:	
			PROJ MGR:	
PLOT UPDATED			APPROVED BY:	

MESQUITE HILLS
COTTONWOOD, AZ 86326

STRUCTURAL PLAN

ISSUED FOR CONSTRUCTION
APPROVED _____ DATE _____

SCALE SPECIFIED
REVISION 0
JOB NO. 16-002
DRAWING No: S-01

MESQUITE
HILLS
MODEL HOMES
& R.V. GARAGE
TURN LEFT ON MINGUS AVENUE

PLANNING &
ZONING
HEARING
LEGAL NOTICE
The City of Cottonwood Planning and Zoning Commission will hold a public hearing at 6:00 P.M. on Monday, August 15, 2016 in the City Council Chambers, 826 N Main St. in Cottonwood. The agenda will include the following:
• PCU 16-008 MESQUITE HILLS SPECIAL DIRECTIONAL SIGN – Consideration of a Conditional Use Permit to allow a special directional sign to the Mesquite Hills subdivision. The sign will be located on property zoned C-1 (Light Commercial), located on the north side of State Route 89A between Mingus Ave. and Candy Lane. APN: 406-33-131Q. Address: 585 W. State Route 89A. Owner: Marcus J. Lawrence Medical Center. Agent: John Alvey.
The public is encouraged to attend. Information relating to these proposals may be obtained at the Cottonwood Community Development Department, 111 North Main Street in Cottonwood.
Information on this project can be obtained from the Community Development Department at 111 N. Main Street 634-5505
07/28/2016 11:01

07/28/2016 11:01

07/28/2016 11:01

07/28/2016 11:01

07/28/2016 11:01

TCS
ADOT
CONTACT
(602) 712-8993
OR
(602) 712-8228
07/28/2016 11:02

Southwestern
Eye Center
07/28/2016 11:02

07/28/2016 11:02

07/28/2016 11:02

07/28/2016 11:02

07/28/2016 11:02

07/28/2016 11:02

07/28/2016 11:02

STAFF REPORT

TO: Planning and Zoning Commission

FROM: Scott Ellis, City Planner

THROUGH: Berrin Nejad, Community Development Director

HEARING DATE: August 15, 2016

PROJECT NUMBER: **DR 16-016 3 Kings Kasbar**

The applicant is requesting Design Review approval for the renovation of an existing bilding in Old Town, to include outdoor seating.

PROJECT DATA AND FACTS:

Applicant/Agent	Dan Surber
Owner	Verde Valley Entertainment Group LLC
Location of Property	102 E. Pima Street
Present Zoning and Land Use	C-1 (Light Commercial) – Vacant Building
Description of Applicant's Request	Renovate site to allow for a restaurant/bar and outdoor seating.

LAND USE:

Description and Character of Surrounding Area
The site is located at 102 E. Pima Street, in Old Town, across from the Outdoor Activity Park. The property currently has two structures on it. **North:** R-2 – Single Family/Multiple Family Residential – Residential homes. **East:** C-1 – Light Commercial – Residential home and a vacant lot. **South:** C-1 – Light Commercial – Old Town Activities Park. **West:** C-1 – Light Commercial – Residential homes.

PROJECT PROPOSAL:

Background:
In 2014, the Commission approved a Conditional Use Permit for this location to include interior and exterior remodeling to allow light manufacturing and wine tasting with an outdoor patio to enjoy.

The new owner of the property would like to remodel the existing buildings to include an event hall and a restaurant/bar. The larger building has most recently been used as a church but has sat vacant for several years. A new outdoor patio will be included with the remodel.

At this time outdoor entertainment is not proposed, however, any future outdoor entertainment will require a Conditional Use Permit.

The proposed development fits within the General Plan designation for this area and the Land Use Map showing General Commercial development.

STRUCTURE DESIGN:

Number and Proposed Use of Building	1 Event Hall and 1 Restaurant/Bar
Number of Stories	1
Square Footage	~3,000 sq.ft. Event Hall ~1,800 sq.ft. Restaurant/Bar

Parking:
Due to its location and lot coverage, this property does not allow for off-street parking and is being allowed the proposed use without requiring additional parking.

Lighting:
Exterior lighting will meet all Dark Sky and lighting code requirements.

Signage:
The applicant is proposing new signage for the two buildings and associated businesses. The sign plan included with the submittal is preliminary and may change. The applicant would like the opportunity to make sign changes to be approved by staff.

Access:
Access to the building will be off E. Pima Street.

Landscape Plan:
A landscape plan has been submitted with plants chosen from the City's approved plant list in the Landscape Ordinance. Plants to be utilized include Red Yucca, Photinia, Italian Cypress, Heavenly Bamboo, and an herb garden.

Utilities:
All necessary utilities are available to the site.

Architecture, Materials, Colors:
The larger building on the property will not have any structural exterior changes done, but it will have new painting, decoration, and signage. The smaller building will be converted to allow an indoor/outdoor bar concept with a garage door type opening. The former gazebo in front of the small building will be replaced with a steel or wood portico for shade and new paves or concrete will be placed in the courtyard. New landscaping improvements will also be included.

CRB Review:
This project was reviewed by the Code Review Board on May 3, 2016 for the event hall use, and July 12, 2016 for the restaurant/bar use. The applicant will be required to meet all comments and conditions from staff.

Staff Review:
Staff has reviewed this project and finds it fits within the General Commercial use of this area as depicted in the General Plan. If approved, staff recommends the following stipulations:

1. That the project is developed in conformance with the plans submitted July 25, 2016, modified and resubmitted August 4, 2016, and as may be further modified by the Planning Commission.

2. That the project conforms to Code Review Board comments dated May 6, 2016 and July 15, 2016.

3. A Certificate of Zoning Compliance documenting the completion of conditions shall be issued by the timeframe specified.

4. Any other stipulations the Planning & Zoning Commission deems necessary.

Denise M. Kelly
Verde Valley Entertainment Group
525 Concho Dr.
Sedona, AZ 86351
Cell – 928-203-6158

RE: Letter of Intent: Epiphany on Pima and 3 Kings Kasbar
102 E. Pima Street
Cottonwood, AZ 86326
Parcel #406 34 052

July 22nd, 2016

Dear Community Development,

Please allow me to answer all the questions required for the letter of intent:

1) Parcel # and location above
2) The Owner and Applicant of the property is Denise M. Kelly.
3) The property was purchased in October 2015.
4) Site description: the site is comprised of 2 building with a walkway in between the buildings.
   One building is 3000+ square feet and was a former Church in its past, among other similar uses.
   The other building adjacent to the above building is approximately 1800 square feet and sits back from the front of the property with a courtyard in front, that when purchased, had a gazebo and concrete pad existing.
5) Proposed usage: the entire property will be called 'Epiphany on Pima'. The former church building will be used for meeting and event space such as art showings, any kind of local group meetings or various functions, therefore retaining former usage as an assembly hall. We will also offer 'interactive art' sessions featuring 'take away souvenirs' art by various local artists with various mediums open to the public or for private events.
   The smaller building with courtyard will house a bar/restaurant (Series 6 license), serving fine cocktails, beer and wine and featuring small plates/tapas as the menu. We will utilize the outdoor courtyard as a seating area as well, again, as it was used in the past.
   Structural development: the former church building will have no structural development; only cosmetic such as painting, decoration and signage.
   The smaller building's front wall with windows, will be changed to an indoor/outdoor bar concept, hence that 1 wall will change to a garage door bar opening type structure. Inside, most of the interior rooms will be removed to form a big open space. Of course, we are ensuring this building to be structurally sound with the addition of structural beams in place. A small kitchen will be added but at this time, no stove with a hood will be installed or used. In place of the original gazebo and the cement pad that we removed per our initial demo permit, we will replace the gazebo with a steel or wood portico to shade the area, as well as pavers or concrete in the courtyard, as well as some landscape as on the approved City of Cottonwood list.

6) Significant historic features: the Church building is considered 'historic' and we are currently working with the Cottonwood Historical Society, specifically Glenda, to further research the history of the property. So far, we know the Church building was built in 1951. We will not be changing the Church significantly enough to affect historic designation; just new paint and signage. We hope to be historically designated very soon!
   The smaller adjacent building is not considered 'historic'.

7) No deed restrictions, however the property is considered to be in the floodplain map changes from October 2015.

8) In reviewing code review meeting notes; we see no significant issues.

9) The only changes to the building since initial code review have been to erect a temporary fence due to possible liability in the courtyard area where the concrete is being replaced.

10) Building permit has been submitted and we are waiting for expected approval in September and we will start immediately. We would love to be open by some of the Fall events in Cottonwood, but ask for up to 6 months to complete the full project. We reserve the right in the future to request future development if needed.

Thanks so very much and sincerely yours,

Denise M. Kelly

7/21/2016

Denise M. Kelly 7/21/2016

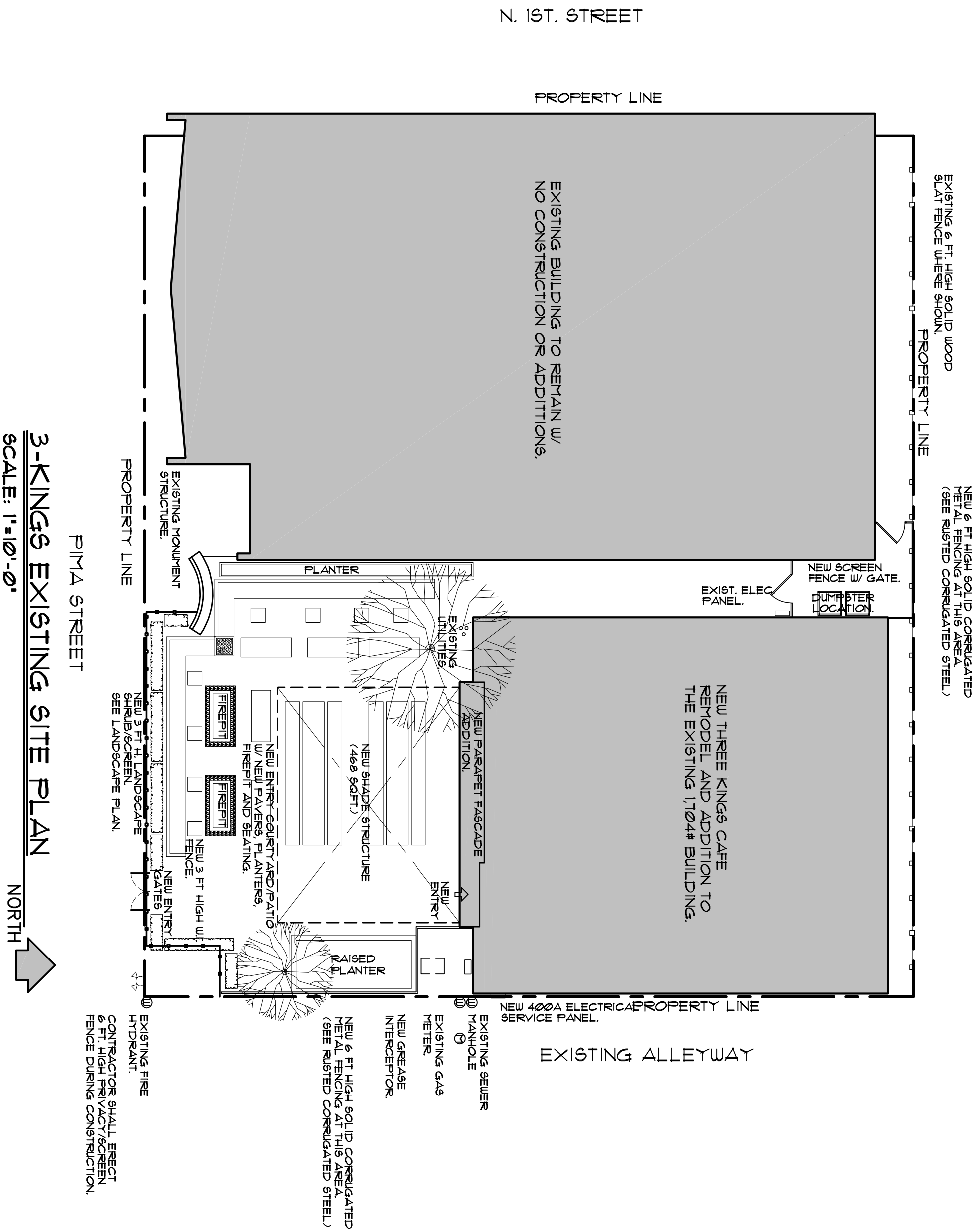

3-KINGS - EXISTING SITE PLAN

SCALE: 1"=10'-0"

THREE KINGS KASBAR

VERDE VALLEY ENTERTAINMENT GROUP APN: 406-34-052

102 E. PIMA ST. COTTONWOOD, ARIZONA

DAN SURBER ARCHITECT

P.O. BOX 3764 SEDONA, AZ. 86340 928-204-2814

PROJECT INFORMATION

REMODEL TO EXISTING BUILDING AND PATIO ROOF STRUCTURE ADDITION TO EXISTING BUILDING LOCATED AT 102 E. PIMA STREET COTTONWOOD, ARIZONA.
REMODEL TO EXISTING 1,704 SQ.FT. BUILDING. CONVERT EXISTING MEETING ROOM AND OFFICES INTO NEW WINE BAR CAFE WITH KITCHEN AND BAR AREA - AND ADD NEW 468 SQ.FT. SHADE STRUCTURE AT FRONT COURTYARD/PATIO.

EXISTING COMMUNITY GATHERING BUILDING TO REMAIN WITH WITH NO CHANGES, EXCEPT FOR NEW EXTERIOR COLOR AND NEW SIGNAGE.

APN # 406-34-052
ADDRESS: 102 E. PIMA STREET
COTTONWOOD, ARIZONA

ZONING: C-1 COMMERCIAL DISTRICT.

NEW TENANT IMPROVEMENT OCCUPANCY: 'A-2' - RESTAURANT BAR
OCCUPANCY LOAD = 20 (LESS THAN 50 OCCUPANTS)

CUSTOMER AREA (924# / 15 = 61.73 OCCUPANTS)	=61.73 OCCUPANTS
KITCHEN AREA (425# / 200 = 2.125 OCCUPANTS)	= 2.125 OCCUPANTS
BAR AREA/COOLER (353# / 200 = 1.765 OCCUPANTS)	= 1.765 OCCUPANTS
TOTAL OCCUPANCY LOAD	= 66 OCCUPANTS

OCCUPANT LOAD REQUIRES TWO EXITS.

PARKING IS EXISTING ON STREET PARKING LOCATED ON PIMA STREET AND N. 1ST STREET.

CODE REQUIREMENTS

2009 INTERNATIONAL BUIDING CODE (IBC)
2009 INTERNATIONAL MECHANICAL CODE (IMC)
2009 INTERNATIONAL FIRE CODE (IFC)
2009 INTERNATIONAL PLUMBING CODE (IPC)
2009 INTERNATIONAL FUEL GAS CODE (IFGC)
2008 NATIONAL ELECTRICAL CODE - NFPA 70 (NEC)
2003 ICC/ANSI A117.1

PROJECT TEAM INFORMATION:

PROPERTY OWNER:
VERDE VALLEY ENTERTAINMENT GROUP LLC.
525 CONCHO DRIVE SEDONA, ARIZONA 86351

NEW TENANT/BUSINESS OWNER:
THREE KINGS KASBAR
102 E. PIMA STREET COTTONWOOD, ARIZONA 86326

DESIGN TEAM:
DAN SURBER ARCHITECT
P.O. BOX 3764 SEDONA, ARIZONA 86340
(928) 204-2814 E-MAIL:dsurber@esedona.net

MUSSA + ASSOCIATES
40 SOLDIERS PASS RD. STE. 15 SEDONA, AZ. 86336
(928) 274-3060

BUILDING CONTRACTOR:
SUNLIGHT BUILDERS - MIKE REYNOLDS
50 OAK CREEK BLVD. SEDONA, AZ. 86336

3-KINGS - PROJECT INFO

THREE KINGS KASBAR
VERDE VALLEY ENTERTAINMENT GROUP APN: 406-34-052
102 E. PIMA ST. COTTONWOOD, ARIZONA
DAN SURBER ARCHITECT
P.O. BOX 3764 SEDONA, AZ. 86340 928-204-2814

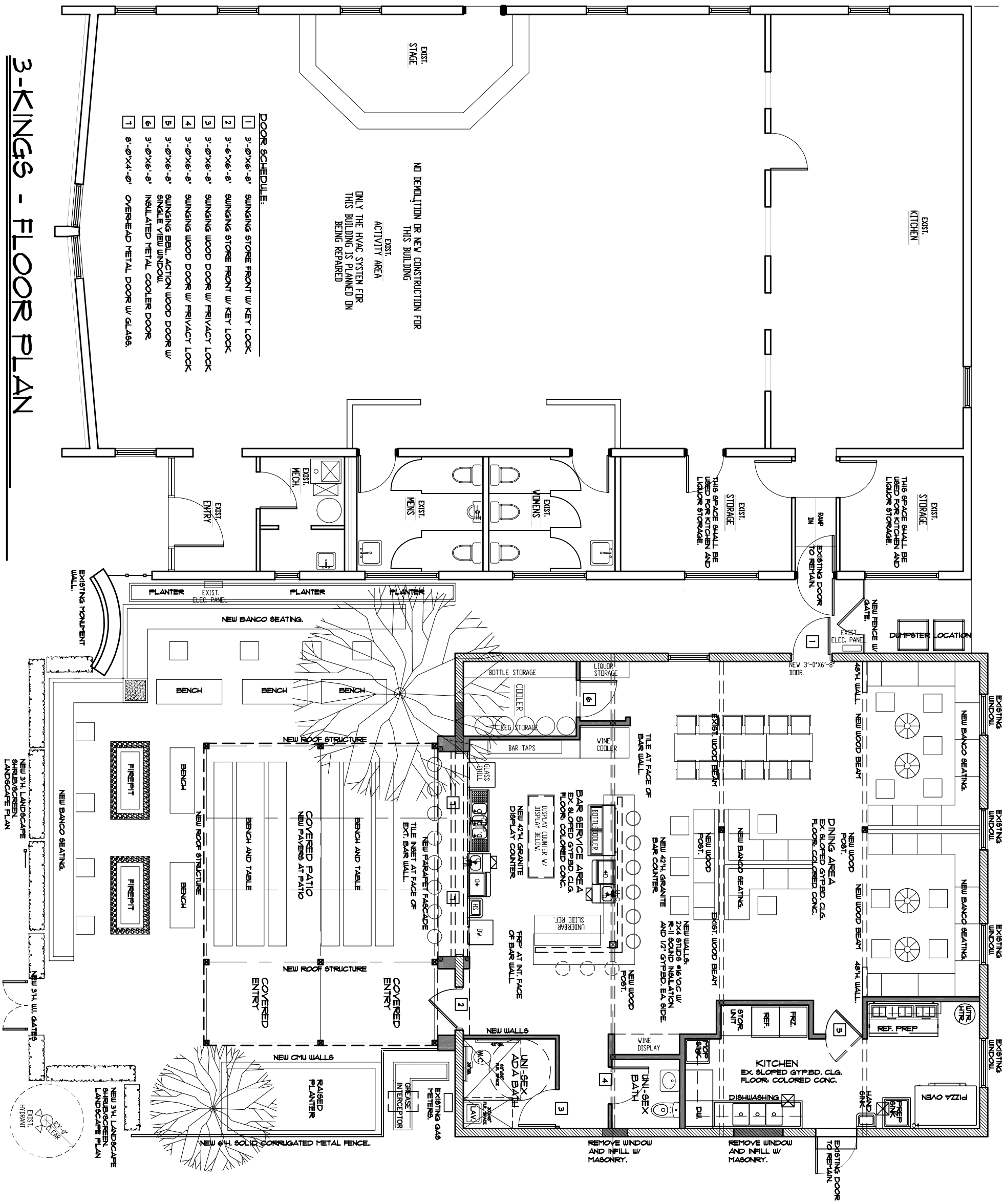

3-KINGS - FLOOR PLAN

SCALE: 1/8"=1'-0"

THREE KINGS KASBAR

VERDE VALLEY ENTERTAINMENT GROUP APN: 406-34-052

102 E. PIMA ST. COTTONWOOD, ARIZONA

DAN SURBER ARCHITECT

P.O. BOX 3764 SEDONA, AZ. 86340 928-204-2814

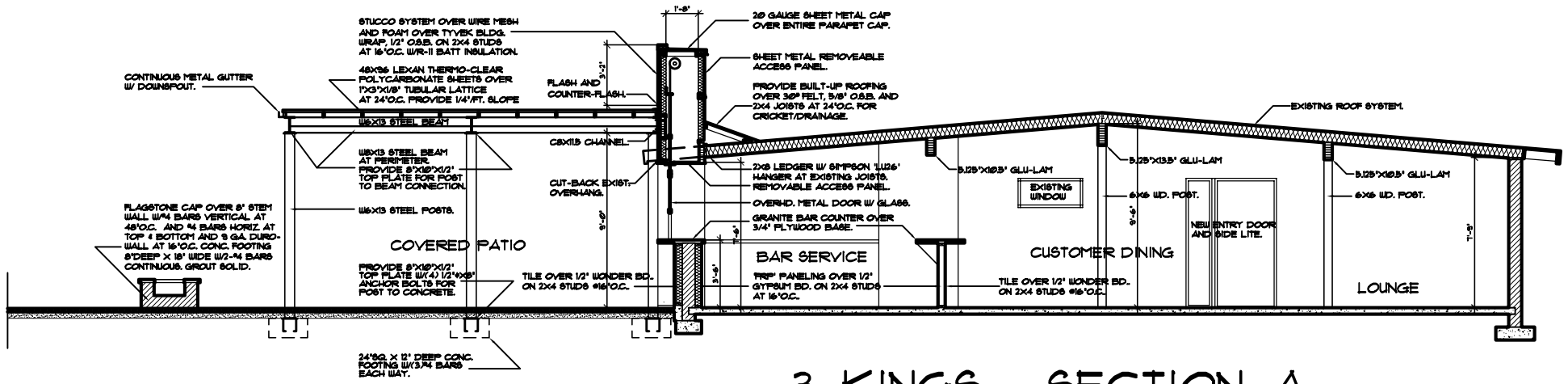

3-KINGS - SECTION-A

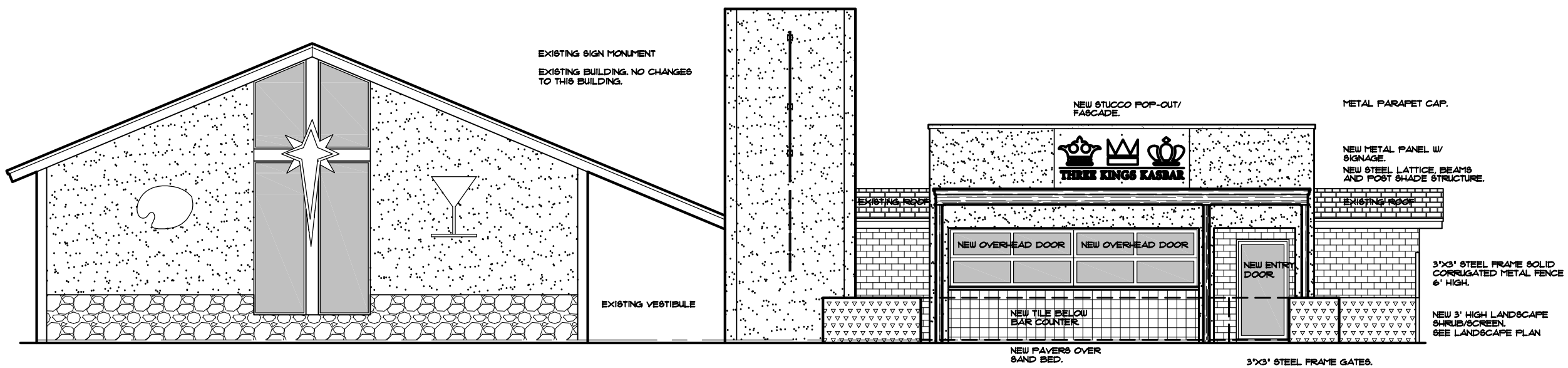

3-KINGS - FRONT/SOUTH ELEVATION

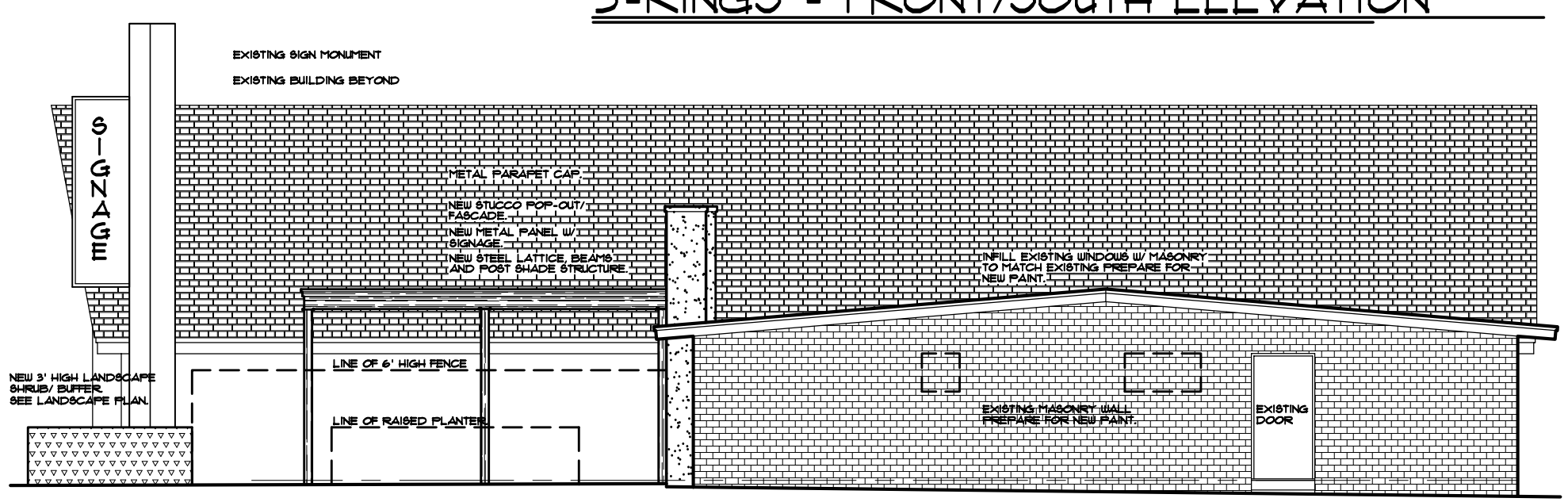

3-KINGS - SIDE/EAST ELEVATION

3-KINGS - SECTION/ELEVATIONS

SCALE: 1/8"=1'-0"

THREE KINGS KASBAR
VERDE VALLEY ENTERTAINMENT GROUP APN: 406-34-052
102 E. PIMA ST. COTTONWOOD, ARIZONA

DAN SURBER ARCHITECT
P.O. BOX 3764 SEDONA, AZ. 86340 928-204-2814

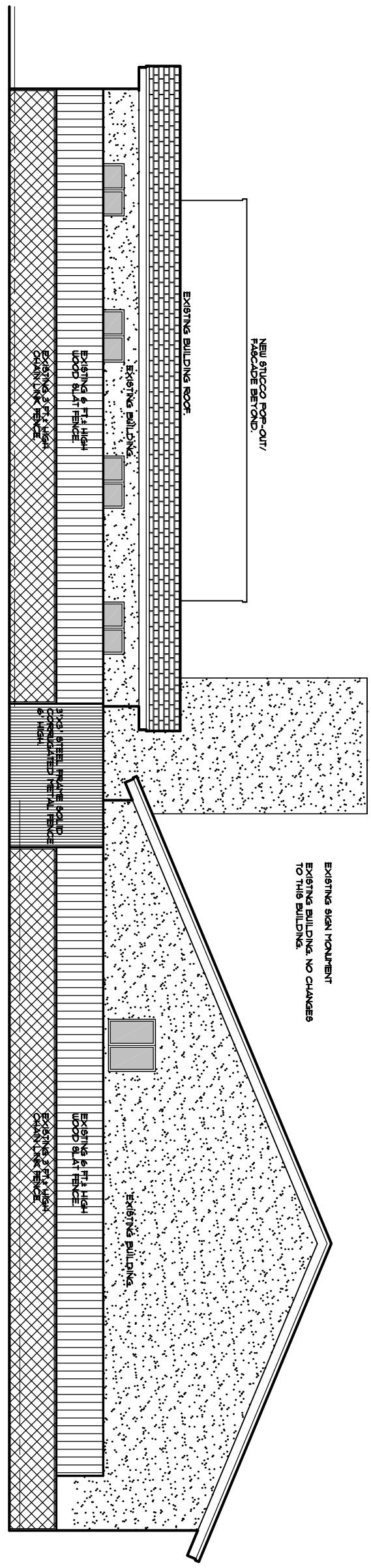

3-KINGS - BACK/NORTH ELEVATION

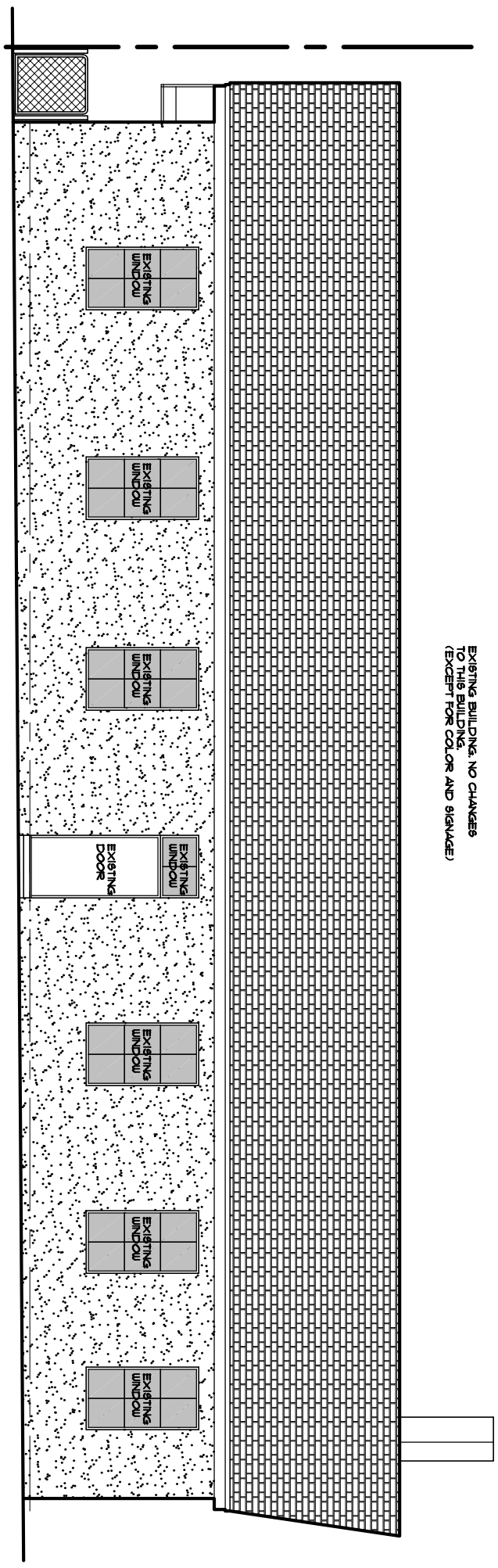

3-KINGS - SIDE/WEST ELEVATION

SCALE: 1/8"=1'-0"

3-KINGS - EXTERIOR ELEVATIONS

SCALE: 1/8"=1'-0"

THREE KINGS KASBAR

VERDE VALLEY ENTERTAINMENT GROUP APN: 406-34-052

102 E. PIMA ST. COTTONWOOD, ARIZONA

DAN SURBER ARCHITECT
P.O. BOX 3764 SEDONA, AZ. 86340 928-204-2814

3 KINGS KASBAR **EXTERIOR**

COTTONWOOD, **AZ**

mussa+associates

3 KINGS KASBAR **EXTERIOR**

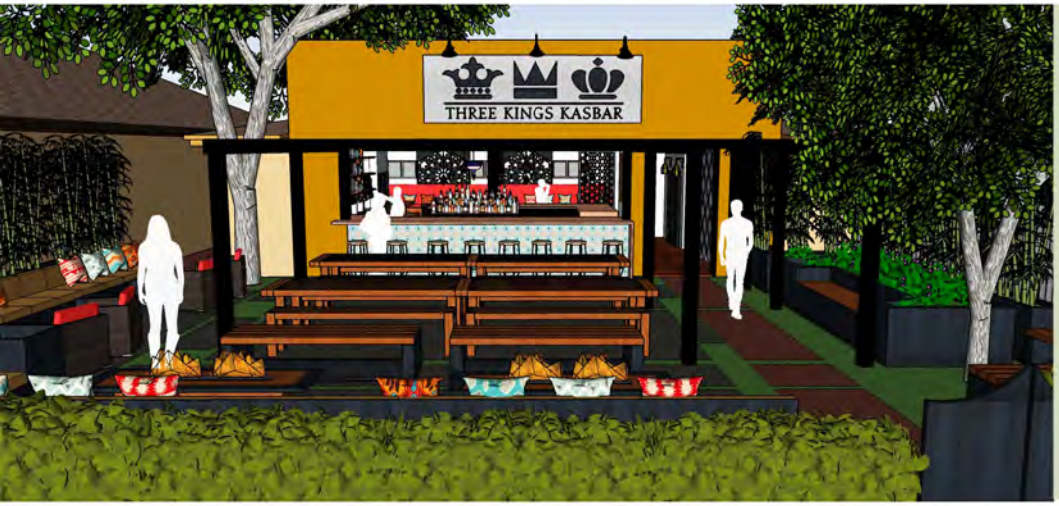

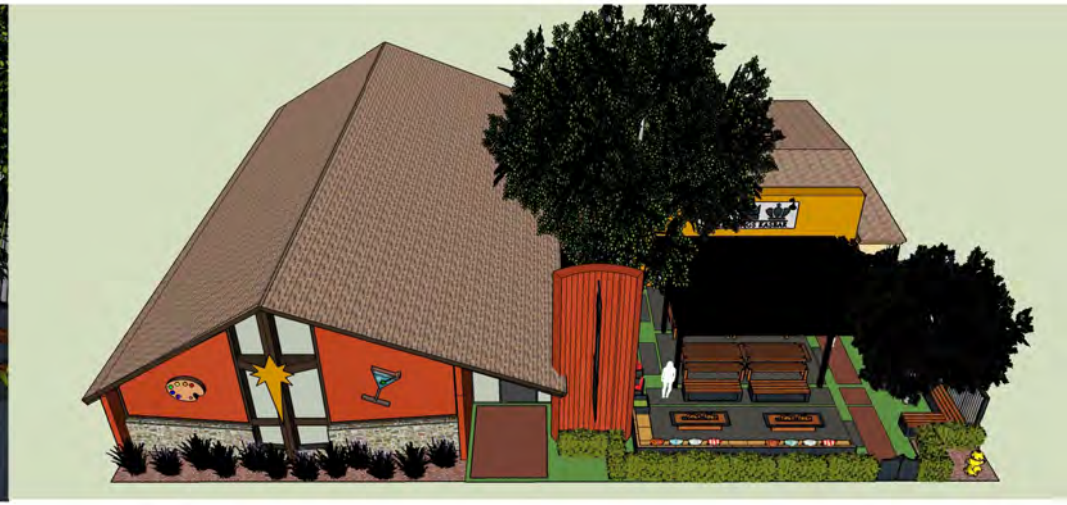

COTTONWOOD, **AZ**
mussa+associates

2X2 STEEL TUBE
CORRUGATED WEATHERED STEEL
SAGE
HERB GARDEN
PHOTENIA
6'

3 KINGS KASBAR **MATERIALS**

PPG Italian Saffron

PPG Apollo Gold

Belgard Catalina Bella

Belgard Holland Fuego

PPG Iron Ore

PPG Dark Granite

Belgard Cambridge Bella

Rusted coorrugated steel

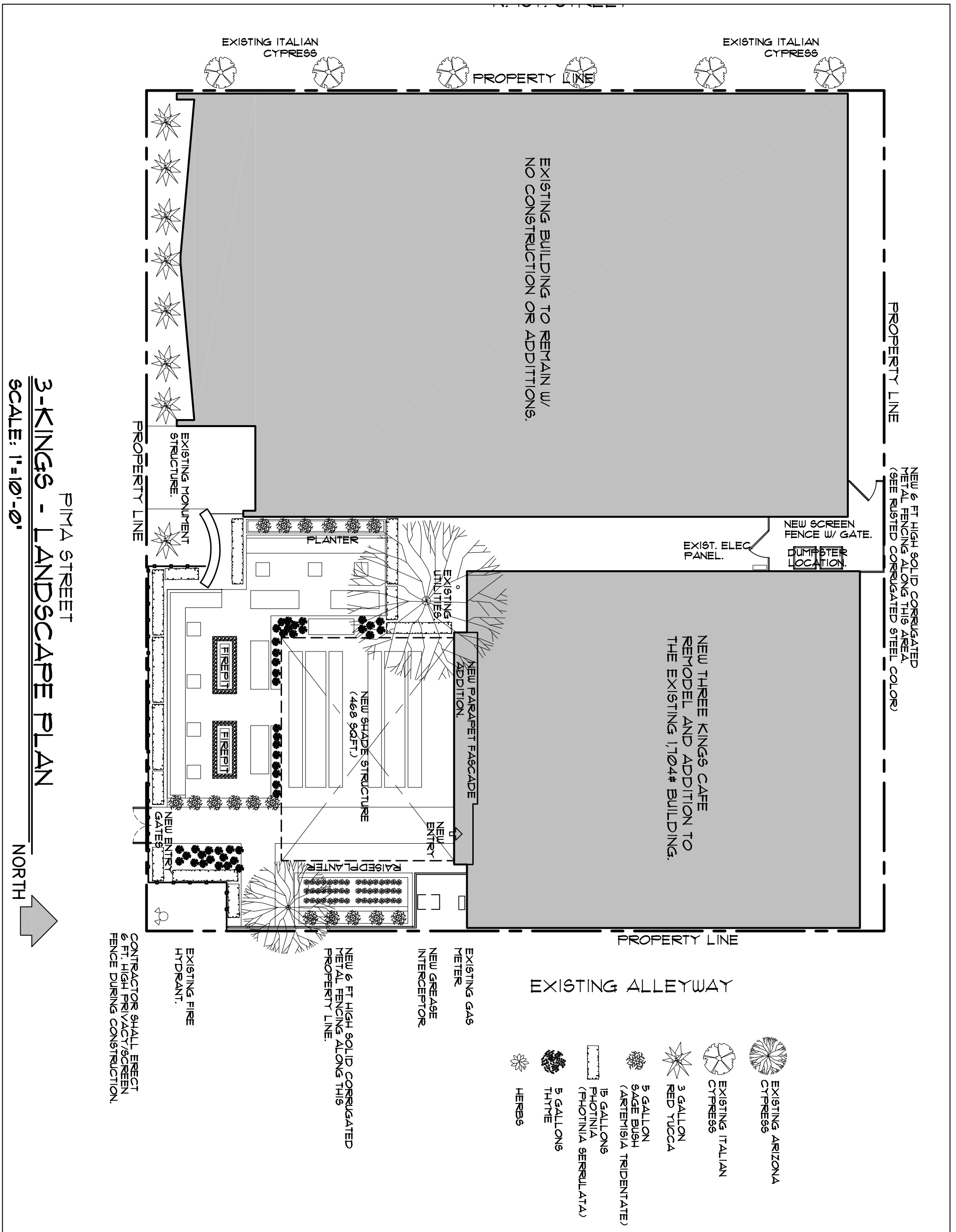

3-KINGS - LANDSCAPE PLAN

SCALE: 1"=10'-0"

THREE KINGS KASBAR

VERDE VALLEY ENTERTAINMENT GROUP

102 E. PIMA ST. COTTONWOOD, ARIZONA

DAN SURBER ARCHITECT

P.O. BOX 3764 SEDONA, AZ. 86340 928-204-2814

3 KINGS KASBAR **PLANTS**

Hesperaloe Paviflora

Cupresses Arizonica

Photinia Serrulata

Artemisia Tridentata

Herb Garden

Cupressus Sempervirens

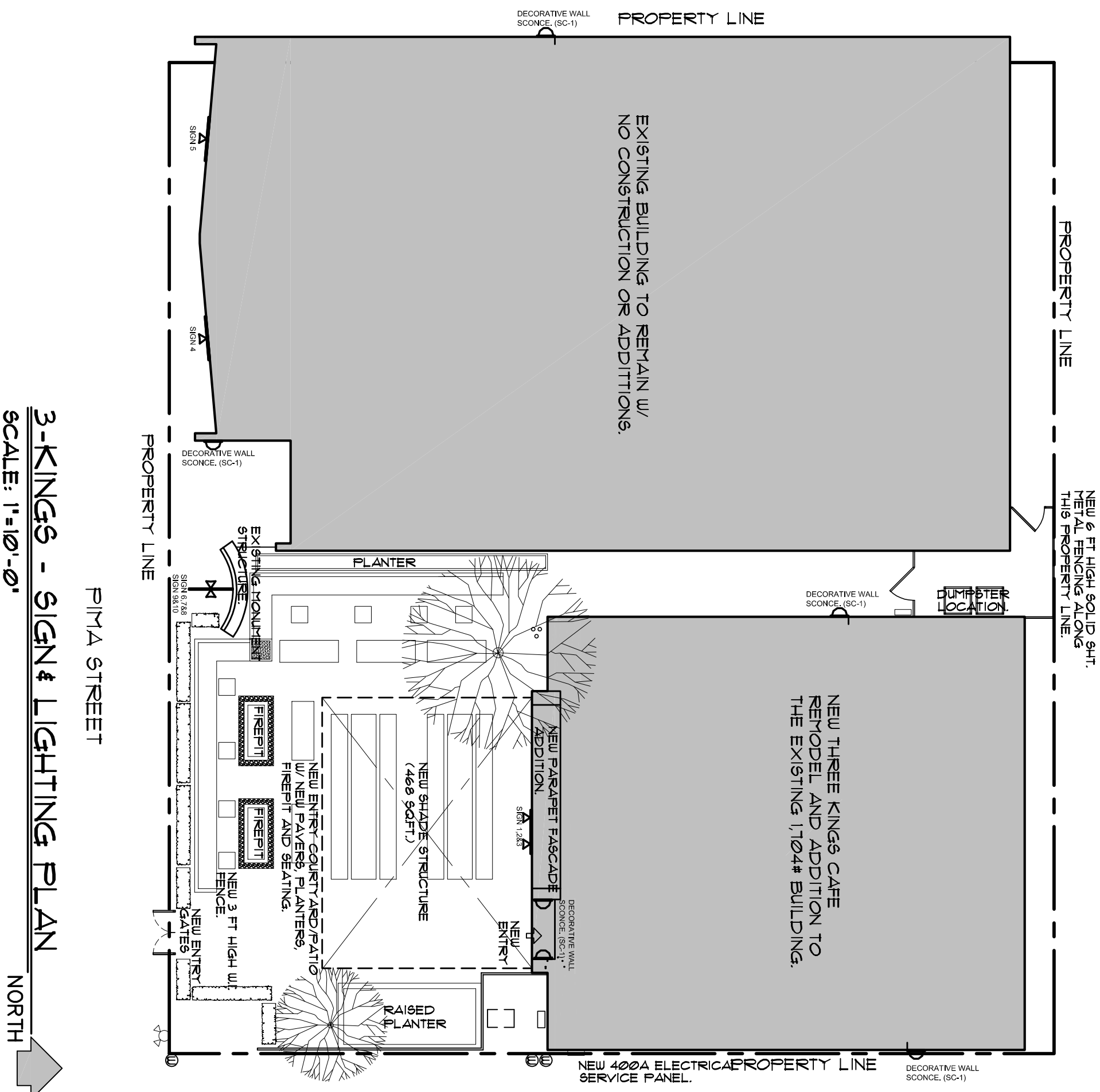

LIGHTING INFORMATION:
TOTAL SITE ACREAGE: .16 ACRES (6,970 SQ.FT.)
TOTAL SHIELDED LUMENS: 17,280 LUMENS

LUMINAIRE SCHEDULE					
Symbol	Label	Description/Lamp	Initial Lumens	Qty	Total Lumens
	SC1	DECORATIVE WALL SCONCE 10W LED LIGHT BULB	1,000	6	6,000
	SD1	FOCUS INDUSTRIES ILLUMINATED SIGN SHIELDED GOOSENECK LED LIGHTING SLS-20 PAR 20 BULBS	1,880	6	11,280
TOTAL PROJECT SITE LUMENS					17,280
TOTAL FULLY SHIELDED LUMENS					17,280

THREE KINGS KASBAR

VERDE VALLEY ENTERTAINMENT GROUP

102 E. PIMA ST. COTTONWOOD, ARIZONA

DAN SURBER ARCHITECT
P.O. BOX 3764 SEDONA, AZ. 86340 928-204-2814

1 | TOP VIEW
SCALE: 1"=1'-0"

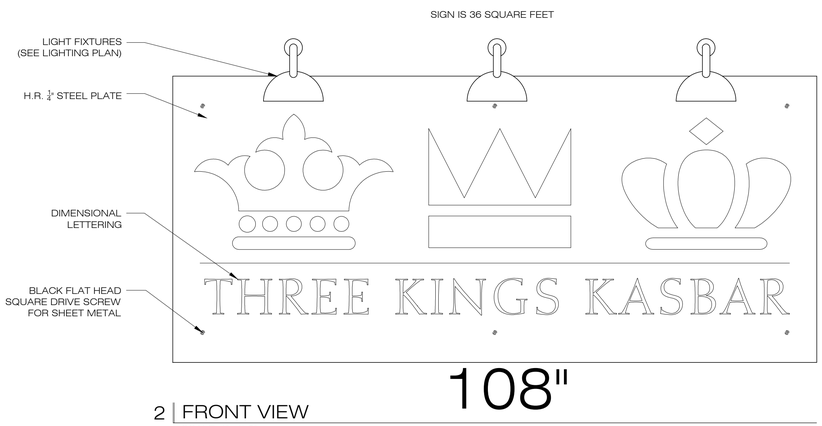

2 | FRONT VIEW
SCALE: 1"=1'-0"

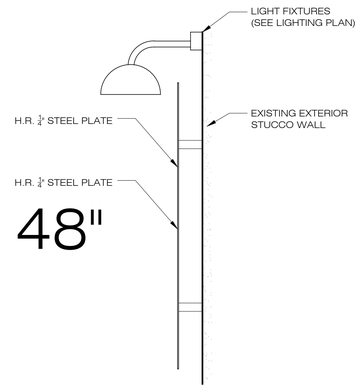

3 | SIDE VIEW
SCALE: 1"=1'-0"

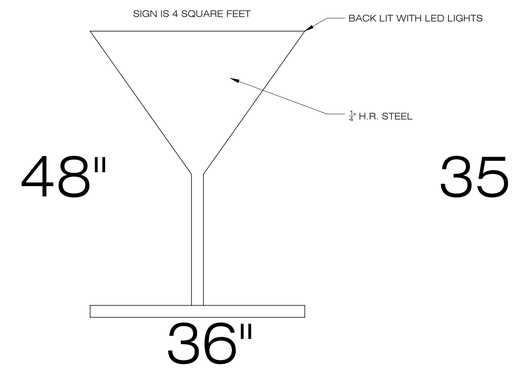

4 | MARTINI SIGN
SCALE: 1"=1'-0"

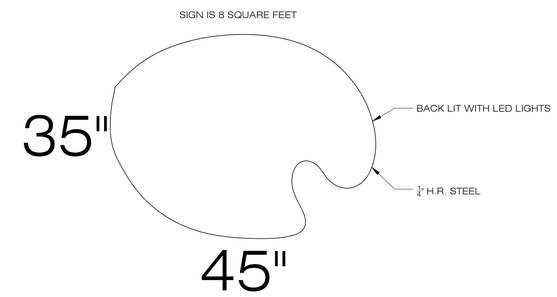

5 | EASEL SIGN
SCALE: 1"=1'-0"

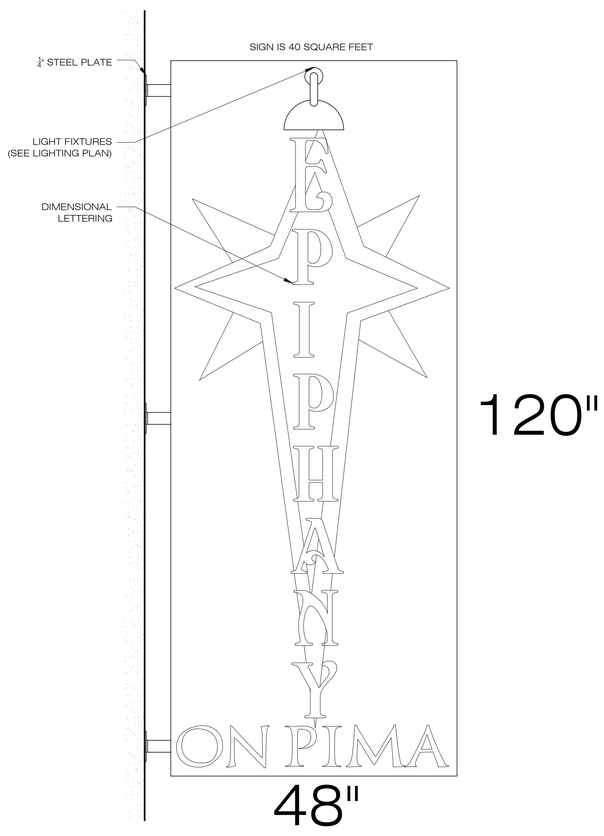

6 | SIDE VIEW
SCALE: 1"=1'-0"

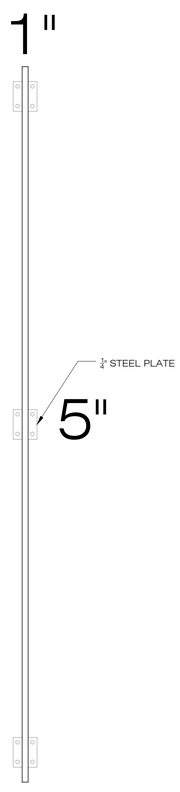

7 | FRONT VIEW
SCALE: 1"=1'-0"

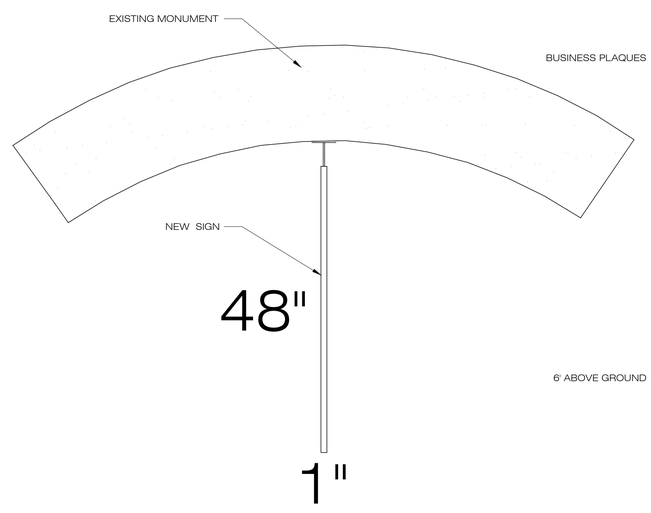

8 | SIDE VIEW
SCALE: 1"=1'-0"

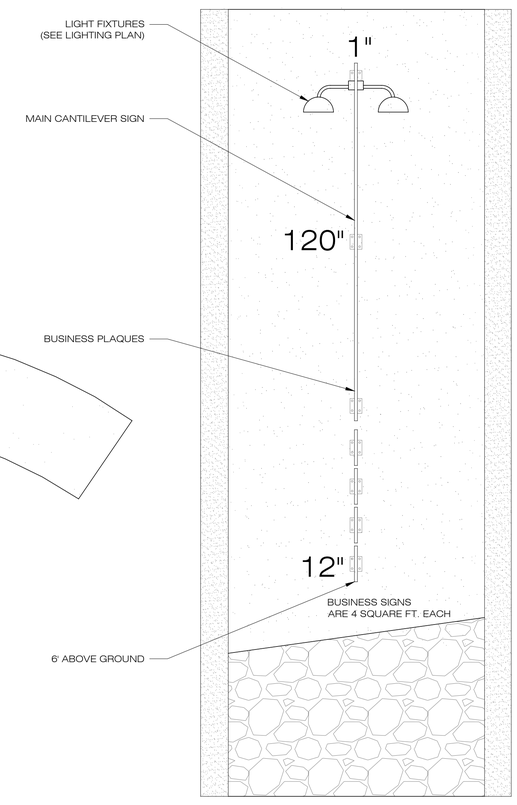

9 | MONUMENT SIGNAGE
SCALE: 1/2"=1'-0"

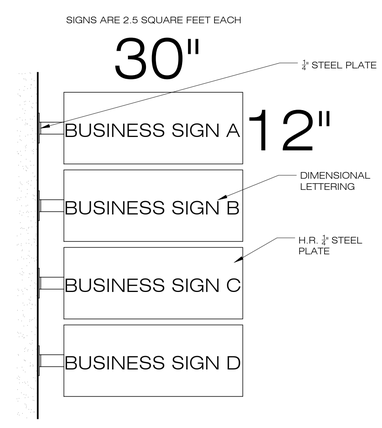

10 | BUSINESS SIGNS
SCALE: 1"=1'-0"

EXISTING LINEAR SQUARE FOOTAGE FOR "CHURCH" IS 46'-7"
EXISTING LINEAR SQUARE FOOTAGE FOR BUILDING 2 IS 39'-4"
*PLEASE REFERENCE ARCHITECTURAL SITE PLAN

MUSSA + ASSOCIATES
40 soldier pass rd, suite 15
sedona, az 86336
t. 928.274.3060

THIS DRAWING IS PROPERTY OF MUSSA + ASSOCIATES LLC AND MAY NOT BE USED OR REPRODUCED IN WHOLE OR PART WITHOUT PRIOR WRITTEN CONSENT OF MUSSA + ASSOCIATES LLC.

3 kings kasbar

6486 state route 179, sedona, az, 86301.

EXTERIOR SIGN DETAILS

7.25.16
8.1.16

A 2.0

08/04/2016 14:36

102
08/04/2016 14:38

FORD
08/04/2016 14:38

102
08/04/2016 14:38

102
Greenwood
08/04/2016 14:38

Cottonwood
08/04/2016 14:38

ELECT
ELINSKI
2016
08/04/2016 14:39

08/04/2016 14:39

ELECT
ELINSKI
08/04/2016 14:39

08/04/2016 14:39

08/04/2016 14:39

08/04/2016 14:41

08/04/2016 14:41

08/04/2016 14:42

08/04/2016 14:42

08/04/2016 14:42

08/04/2016 14:42

08/04/2016 14:42

08/04/2016 14:43

08/04/2016 14:43

102
08/04/2016 14:43

08/04/2016 14:43