"Inspiring a Vibrant Community"

CITY OF COTTONWOOD
ENGINEERING DESIGN STANDARDS MANUAL

2020

Date: 06/10/2020

[This Page Intentionally Left Blank]

CONTENTS

Article 1: INTRODUCTION 1-1
1.1 Introduction 1-1
1.1.1 Purpose 1-1
1.1.2 Applicability 1-1
1.2 Scope 1-3
1.3 Regulations & Planning 1-4
1.3.1 City Codes, Ordinances & Regulations 1-4
1.3.2 Comprehensive Planning 1-4
1.3.3 Other Regulatory Agencies 1-4
1.4 Definitions 1-5
ARTICLE 2: GRADING 2-1
2.1 INTRODUCTION 2-1
2.1.1 Purpose 2-1
2.1.2 Applicability 2-1
2.1.3 Design Standards & Guidelines 2-1
2.1.4 State Regulations 2-1
2.2 GENERAL INFORMATION 2-2
2.3 GRADING STANDARDS & CRITERIA 2-2
2.3.1 Grading Standards 2-2
2.4 PLAN SUBMITTAL REQUIREMENTS 2-6
2.4.1 Submittals 2-6
2.5 PRELIMINARY GRADING 2-7
2.5.1 Preliminary Grading Permit 2-7
2.6 GRADING PERMIT 2-8
2.7 FLOODPLAIN MANAGEMENT 2-9
2.8 BLASTING 2-9
2.9 RETAINING WALLS 2-9
2.9.1 Permit Documents 2-9
2.9.2 Inspections & Testing 2-10
2.9.3 Exceptions 2-10
ARTICLE 3: DRAINAGE 3-1
3.1 Introduction 3-1

3.1.1Purpose 3-1
3.1.2 Applicability 3-1
3.1.3 Design Standards & Guidelines 3-1
3.1.4 General Information 3-1
3.2 DRAINAGE REPORTS & PLANS 3-2
3.2.1 Purpose 3-2
3.2.2 Drainage Report & Plans Required 3-2
3.2.3 Preliminary Drainage Report 3-2
3.2.4 Final Drainage Report 3-6
3.2.5 Drainage Construction Plans 3-7
3.2.6 FEMA Designated Flood Hazard Areas 3-8
3.3 HYDROLOGY 3-8
3.3.1 Purpose 3-8
3.3.2 General Policies 3-8
3.3.3 Rainfall Data 3-9
3.3.4 Time of Concentration 3-9
3.3.5 Detailed Hydrologic Methods 3-10
3.3.6 Rational Method 3-10
3.4 OPEN CHANNELS 3-10
3.4.1 Purpose 3-10
3.4.2 General Policies for Natural Channels 3-11
3.4.3 General Policies for Man-Made Channels 3-11
3.4.4 Channel Design 3-12
3.4.5 Freeboard 3-12
3.5 CULVERTS & BRIDGES 3-13
3.5.1 Purpose 3-13
3.5.2 General Policies 3-13
3.5.3 Inlet & Outlet Treatment 3-14
3.5.4 Culvert Material & Installation 3-14
3.6 STREET DRAINAGE 3-15
3.6.1 Purpose 3-15
3.6.2 General Policies 3-15
3.6.3 Street & Gutter 3-16

3.6.4 Catch Basins 3-17
3.7 STORM DRAINS 3-18
3.7.1 Purpose 3-18
3.7.2 General Policies 3-18
3.7.3 Design Criteria 3-18
3.7.4 Manholes & Junction Structures 3-19
3.7.5 Hydraulics 3-20
3.8 STORMWATER DETENTION 3-20
3.8.1 Purpose 3-20
3.8.2 General Policies 3-20
3.8.3 Design Criteria 3-21
3.9 EROSION & SEDIMENT CONTROL 3-22
3.9.1 Purpose 3-22
3.9.2 Applicability 3-23
3.9.3 General Guidelines 3-23
3.9.4 Design Criteria 3-23
3.10 POST CONSTRUCTION STORMWATER TREATMENT 3-24
3.10.1 Purpose 3-24
3.10.2 Applicability 3-24
3.10.3 Guidelines 3-24
3.10.4 Operations & Maintenance 3-24
ARTICLE 4: WATER 4-1
4.1 INTRODUCTION 4-1
4.1.1 Purpose 4-1
4.1.2 Applicability 4-1
4.1.3 Design Standards & Guidelines 4-1
4.1.4 State Regulations 4-2
4.2 GENERAL INFORMATION 4-2
4.3 PLAN SUBMITTAL REQUIREMENTS 4-3
4.4 WATER SYSTEM REPORTS 4-3
4.4.1 General Information 4-3
4.4.2 Water Master Plan Report Content 4-5
4.4.3 Water Design Report Content 4-6

4.4.4 Water Modelling 4-8
4.5 WATER SYSTEM DEMAND 4-13
4.5.1 System Demand 4-13
4.5.2 Infrastructure Sizing 4-13
4.6 PLANNING 4-13
4.6.1 Comprehensive Planning 4-13
4.6.2 Water Facilities 4-13
4.7 TRANSMISSION & DISTRIBUTION SYSTEMS 4-15
4.7.1 General Information 4-15
4.7.2 Water Main Pipes & Materials 4-16
4.7.3 System Layout 4-17
4.7.4 Dead-End Mains 4-18
4.7.5 Design Flows 4-18
4.7.6 Fire Hydrant Flow Test Requirements 4-19
4.7.7 Pressure Requirements for New Development 4-19
4.7.8 Pressure Reducing Valves (PRV's) 4-20
4.7.9 Valves 4-20
4.7.10 Fittings 4-21
4.7.11 Valve Locations 4-21
4.7.12 Air Release Valves 4-22
4.7.13 Thrust Restraint 4-22
4.7.14 Electronic Markers 4-23
4.7.15 Pipe Cover 4-23
4.7.16 Wash Crossings 4-24
4.7.17 Separations & Vertical Realignments 4-24
4.7.18 Service Lines & Meters 4-25
4.7.19 Backflow Prevention & Cross Connection Control 4-26
4.7.20 Tract & Easement Requirements 4-27
4.8 FIRE PROTECTION 4-28
4.8.1 General Information 4-28
4.8.2 Fire Flow Requirements 4-28
4.8.3 Hydrant Locations 4-29
4.8.4 Fire Lines & Building Sprinkler Lines 4-29

4.8.5 Fire Department Connection 4-30
4.8.6 Auxiliary Storage Tanks 4-30
ARTICLE 5: RECLAIMED WATER 5-1
5.1 INTRODUCTION 5-1
5.1.1 Purpose 5-1
5.1.2 Applicability 5-1
5.1.3 Design Standards & Guidelines 5-1
5.1.4 State Regulations 5-1
5.2 GENERAL INFORMATION 5-2
5.2.1 Reclaimed Water Availability 5-2
5.2.2 Agreements 5-2
5.3 PLAN SUBMITTAL REQUIREMENTS 5-2
5.4 Reclaimed WATER SYSTEM REPORTS 5-3
5.4.1 General Information 5-3
5.4.2 Reclaimed Water Master Plan Report Content 5-4
5.4.3 Reclaimed Water Design Report Content 5-5
5.4.4 Reclaimed Water Modelling 5-6
5.5 RECLAIMED WATER SYSTEM DEMAND 5-8
5.5.1 System Demand 5-8
5.5.2 Infrastructure Sizing 5-8
5.6 PLANNING 5-8
5.6.1 Comprehensive Planning 5-8
5.6.2 Reclaimed Water Facilities 5-8
5.7 DISTRIBUTION SYSTEM 5-9
5.7.1 General Information 5-9
5.7.2 Reclaimed Water Main Pipes & Materials 5-10
5.7.3 System Layout 5-11
5.7.4 Dead-End Mains 5-12
5.7.5 Design Flows 5-12
5.7.7 Pressure Requirements for New Development 5-13
5.7.8 Pressure Reducing Valves (PRV's) 5-13
5.7.9 Valves 5-14
5.7.10 Fittings 5-14

5.7.11 Valve Locations 5-14
5.7.12 Air Release Valves 5-15
5.7.13 Thrust Restraint 5-15
5.7.14 Electronic Markers 5-16
5.7.15 Pipe Cover 5-16
5.7.16 Wash Crossings 5-17
5.7.17 Separations & Vertical Realignments 5-17
5.7.18 Service Lines & Meters 5-18
5.7.19 Backflow Prevention & Cross Connection Control 5-19
5.7.20 Tract & Easement Requirements 5-19
ARTICLE 6: WASTEWATER 6-1
6.1 INTRODUCTION 6-1
6.1.1 Purpose 6-1
6.1.2 Applicability 6-1
6.1.3 Design Standards & Guidelines 6-1
6.1.4 Federal, State & County Regulations 6-2
6.2 GENERAL INFORMATION 6-3
6.2.1 Availability of Public City Sewer 6-3
6.2.2 Private Wastewater Areas 6-3
6.2.3 Private On-Site Systems / Alternative Treatment Facilities 6-3
6.2.4 Private Gravity Mains / Low Pressure Sewer Systems 6-4
6.3 AGREEMENTS 6-5
6.4 PLAN SUBMITTAL REQUIREMENTS 6-5
6.5 WASTEWATER SYSTEM REPORTS 6-5
6.5.1 General Information 6-5
6.5.2 Wastewater Master Plan Report Content 6-8
6.5.3 Wastewater Design Report Content 6-9
6.5.4 Sewer System Model Analysis 6-9
6.6 WASTWATER DESIGN FLOWS 6-11
6.6.1 Wastewater Collection Analysis 6-11
6.6.2 Wastewater System Loads 6-11
6.6.3 Peaking Factor 6-13
6.7 INDIVIDUAL WASTEWATER TREATMENT FACILITIES 6-14

6.7.1 On-Site Treatment & Disposal Facilities 6-14
6.7.2 Wastewater Lift Stations 6-14
6.7.3 Force Mains 6-16
6.7.4 Flow Metering Structure 6-17
6.8 COLLECTION SYSTEM 6-17
6.8.1 General Requirements 6-17
6.8.2 Design Policy 6-18
6.8.3 Design Standards 6-18
6.9 MATERIALS 6-18
6.9.1 Pipe Selection 6-18
6.9.2 Materials 6-18
6.9.3 System Layout 6-19
6.9.4 Design Flows 6-19
6.9.5 Hydraulic Design 6-20
6.9.6 Manholes & Cleanouts 6-21
6.9.7 Pretreatment Monitoring Vaults & Manholes 6-23
6.9.8 Pipe Cover & Separation 6-24
6.9.9 Wash Crossings 6-25
6.9.10 Gravity Sanitary Sewer Service Connections 6-25
6.9.11 Pressurized Sanitary Sewer Service Connections 6-26
6.9.12 Grease, Oil & Sand Interceptors 6-27
6.9.13 Tract & Easement Requirements 6-27
6.9.14 Easement Abandonment Requirements 6-28
6.9.15 Alternative Sanitary Sewer Systems 6-28
ARTICLE 7: TRANSPORTATION – TRAFFIC 7-1
7.1 INTRODUCTION 7-1
7.1.1 Purpose 7-1
7.1.2 Applicability 7-1
7.1.3 Design Standards & Guidelines 7-1
7.2 PLANNING 7-1
7.2.1 Traffic Impact Analysis 7-1
7.2.2 Roadway Classification 7-2
7.2.3 Roadway Right of Way Requirements 7-2

7.2.4 Intersection Sight Visibility Triangle Easements 7-3
7.2.5 Subdivision Street Planning 7-3
7.3 HORIZONTAL ALIGNMENT 7-5
7.3.1 Minimum Curve Radius 7-5
7.3.2 Superelevation in Curves 7-6
7.3.3 Compound Curves 7-6
7.3.4 Special Tangent Sections between Curves in the Same Direction 7-7
7.3.5 Tangent Sections between Reverse Curves 7-7
7.3.6 Tangent Sections Approaching Intersections 7-8
7.4 VERTICAL ALIGNMENT 7-8
7.4.1 Vertical Curves 7-8
7.4.2 Horizontal & Vertical Curves 7-9
7.4.3 Longitudinal Street Grades 7-9
7.4.4 Speed Limits 7-9
7.4.5 Street Intersection Spacing 7-9
7.4.6 Auxiliary Traffic Lanes 7-10
7.4.7 Driveway Access Guidelines 7-13
7.4.8 Median Design 7-15
7.5 EASEMENTS & DEDICATIONS 7-17
7.5.1 Public Utility Easement (PUE) 7-17
7.5.2 Non-Vehicular Access Easement (NVAE) 7-17
7.5.3 Temporary Construction Easement (TCE) 7-17
7.6 CURB & GUTTER 7-17
7.6.1 Vertical Curb 7-17
7.6.2 Roll Curb 7-17
7.6.3 Median Curb 7-17
7.6.4 Curb Returns 7-18
7.7 SIDEWALKS 7-19
7.7.1 Sidewalk Widths 7-19
7.7.2 Pedestrian Ways 7-19
7.7.3 Multi-Use Paths / Trail Facilities 7-19
7.8 PAVEMENT CROSS SECTIONS 7-21
7.8.1 Undivided Streets 7-21

7.8.2 Divided Streets 7-21
7.9 CUL-DE-SACS & KNUCKLES 7-21
7.9.1 Cul-De-Sac Street 7-21
7.9.2 Knuckles 7-21
7.10 DEAD END STREETS 7-21
7.11 MAIL BOXES 7-22
7.12 TRAFFIC CONTROL DEVICE SELECTION 7-23
7.13 ON-STREET PARKING 7-24
7.14 BUS BENCH / SHELTER LOCATIONS 7-25
7.15 TRAFFIC SIGNALS & LIGHTING 7-26
7.15.1 Public Street Lighting 7-26
7.15.2 Street Light Selection 7-26
7.15.3 Street Light Design 7-26
7.15.4 General Street Light Notes 7-27
7.15.5 Cobra Head Street Light Luminaries 7-27
7.15.6 Traffic Signals 7-29
7.16 SIGNING 7-31
7.16.1 Signing 7-31
7.16.2 Sign Design Guidelines 7-31
7.16.3 General Signing Guidelines 7-31
7.16.4 Sign Posts 7-32
7.16.5 Street Name Signs 7-32
7.16.6 Low Water Crossing Gates 7-33
7.16.7 End of Road Delineators 7-33
7.16.8 Signing Plan Checklist 7-33
7.17 STRIPING 7-34
7.17.1 Striping 7-34
7.17.2 Striping Design Guidelines 7-34
7.18 GUARDRAIL 7-36
ARTICLE 8: DRY UTILITIES 8-1
8.1 General Information 8-1
8.1.1 Purpose 8-1
8.1.2 Applicability 8-1

8.2 Private Utilities 8-1
8.2.1 Franchise Agreements 8-1
8.3 Dedication of Public Utility Easements 8-1
8.4 Blue Stake Notification (Arizona 811) 8-1
8.5 Underground Conflicts 8-1
8.6 Code Conflicts 8-2
8.7 Conflict Review 8-2
8.8 Plan Requirements & Guidelines 8-2
8.9 Permit Required 8-3
8.10 Common Trench & Locations 8-3
8.11 Minimum Clearances 8-3
8.12 Pavement Cuts 8-3
8.13 Horizontal Bores 8-4
8.14 Dry Utilities Checklist 8-4
ARTICLE 9: SURVEY 9-1
9.1 Introduction 9-1
9.1.1 Purpose 9-1
9.1.2 Applicability 9-1
9.1.3 Statement of Intent with regard to Digital Data 9-1
9.1.4 Geographic Information System (GIS) Technology 9-1
9.2 Land Surveying 9-1
9.2.1 Boundary Survey Standards 9-1
9.2.2 Horizontal & Vertical Control System 9-2
9.3 Benchmarks 9-2
9.3.1 Benchmark Reference 9-2
9.3.2 Plan Datum Reference 9-2
9.3.3 Current Datum 9-2
ARTICLE 10: ALTERATIONS & MODIFICATIONS 10-1
10.1 Introduction 10-1
10.1.1 Purpose 10-1
10.1.2 Qualification Criteria 10-1
10.2 Alterations or Modification Process 10-2
10.2.1 Submittals 10-2

10.2.2 Application & Documents 10-2
10.2.3 Application Completeness 10-3
10.2.4 Justification for Request 10-3
10.2.5 Fees 10-3
10.2.6 Evaluation 10-4
10.3 Administrative Alteration of Modification 10-4
10.3.1 Review Procedure 10-4
10.3.2 Written Determination 10-4
10.4 Technical (Minor) Alteration or Modification 10-4
10.4.1 Review Procedure 10-4
10.4.2 Written Determination 10-4
10.5 Design Alteration or Modification 10-5
10.5.1 Review Procedure 10-5
10.5.2 Written Determination 10-5
10.6 General Conditions 10-5
ARTICLE 11: RECORD DRAWINGS (AS-BUILTS) 11-1
11.1 Introduction 11-1
11.1.1 Purpose 11-1
11.1.2 Applicability 11-1
11.2 Record Drawing Plans 11-1
11.2.1 Record Drawing Plan Submittal 11-1
APPENDICIES 11-1
Appendix A: List of Tables A-1
Appendix B: City of Cottonwood Standard Details B-1
Appendix C: City of Cottonwood CADD Standards C-1

[Page Intentionally Left Blank]

ARTICLE 1: INTRODUCTION

1.1 INTRODUCTION

The City of Cottonwood (COC) has determined that to provide clear concise direction to design professionals, the development community, and contractors, a single point of reference is needed. The City has prepared, and will periodically update, this Engineering Design Standards Manual (EDSM), as deemed necessary. This manual is being provided as a tool to aid the design community in designs being conducted for the City.

1.1.1 Purpose

A. The purpose of establishing the EDSM is to provide uniform and functional facilities that ensure the health and safety, and enhance the quality of life for the residents of the City of Cottonwood.

B. The EDSM also provides owners, developers, and Contractors with directions, construction requirements, and the City's expectations for the development of infrastructure improvements. The design concepts and specific technical data presented in this Manual are provided to guide and inform the design and development community of the City's expectations.

C. The goal of the EDSM is to assist in the orderly development and improvement of property with the goals of protecting the public's health, safety and welfare; improving the long-term value of the City's infrastructure assets; and improving quality of life for the residents and visitors of Cottonwood.

1.1.2 Applicability

A. The EDSM along with the Cottonwood City Code, Standard Specifications and Standard Details described herein shall govern all infrastructure improvements for the City of Cottonwood Capital Improvement Projects and development projects.

B. This document is supported by various publications, which comprise the standard references for the types of work encompassed in the Public Works Department. In the event of any conflict or discrepancy between the EDSM, and any of the related publications listed below, the EDSM shall take precedence.

C. The following are considered to be Design Standards by the Public Works Department and follow a hierarchy in which the local standard governs. In cases where the local and county standards do not address the design issue; then the appropriate state standard governs. In cases where the local, county and state standards do not discuss the design issue, then the appropriate federal standard governs.

1. Local Standards:
   City of Cottonwood Engineering Design Standards Manual (as amended)
   City of Cottonwood Standard Details (as amended)
2. County Standards:
   Maricopa County Roadway Design Manual

Maricopa County Association of Governments (MAG) – Uniform Standard Specifications and Standard Details for Public Works Construction (Current Edition)

Drainage Design Manual for Yavapai County (Current Edition)

3. State Standards:

   Arizona Department of Transportation (ADOT)

   Local Public Agency (LPA) Projects Manual

   Roadway Design Construction Standards and Drawings

   Standard Specifications for Roadway and Bridge Construction

   Arizona Supplement to Manual on Uniform Traffic Control Devices (MUTCD)

   Traffic Signals and Lighting

   Manual of Approved Signs

   Arizona Department of Environmental Quality (ADEQ)

   Arizona Administrative Code, Bulletins 8 & 10

   Arizona Department of Water Resources (ADWR)

4. Federal Standards:

   Federal Highway Authority (FHWA)

   Manual on Uniform Traffic Control Devices (MUTCD) (with Arizona Supplement)

   Federal Emergency Management Agency (FEMA) – National Flood Insurance Program (NFIP)

   Clean Water Act

   National Environmental Policy Act (NEPA)

D. The most recent versions of each of the following are considered to be incorporated by reference into this document.

1. City of Cottonwood General Plan (CGP)
2. City of Cottonwood Zoning Ordinance (CZO)
3. City of Cottonwood Subdivision Ordinance (CSO)
4. Cottonwood Municipal Code (CMC)
5. Other Publications

   American Association of State Highway and Transportation Officials (AASHTO)

   - Policy on Geometric Design on Highways
   - Low-Volume Road Design
   - Roadside Design Guide
   - Guide for Development of Bicycle Facilities
   - Design Handbook for Older Drivers and Pedestrians

   American Public Works Association (APWA)

   American Society of Civil Engineers (ASCE)

   American Society for Testing and Materials (ASTM)

   American Water Works Association (AWWA)

   Arizona Revised Statutes (ARS)

Arizona State Board of Technical Registration (ASBTR)

Arizona Administrative Code (AAC)

City of Cottonwood Bicycle Plan

City of Cottonwood Fire Department

Institute of Transportation Engineers (ITE)

- Residential Street Design and Traffic Control
- Residential Streets
- Traffic Calming – State of the Practice
- Trip Generation: An Informational Report
- Parking Generation

International Building Code (IBC)

Local and Regional Transportation Studies/Plans

Local and Regional Drainage Studies

OSHA Construction Safety Orders

Transportation Research Board (TRB)

- Highway Capacity Manual

University of Southern California Foundation for Cross Connection Control and Hydraulic Research (USC)

Other publications and standards may be referenced from time to time as appropriate

1.2 SCOPE

A. The EDSM consist of three major components: (1) Design Standards, (2) Construction Specifications, and (3) Standard Details. The Design Standards and Standard Details are presented together in each of the following Articles:

1. Introduction
2. Grading
3. Drainage
4. Water
5. Reclaimed Water
6. Wastewater
7. Transportation/Traffic
8. Dry Utilities
9. Survey
10. Alterations & Modifications
11. Record Drawings (As-Builts)

B. The Standard Details for each of these areas are included in the Appendix to the document.

C. The EDSM establishes the minimum requirements for the design and construction of any public improvement in the City of Cottonwood service area (e.g. Verde Villages (VV), Yavapai County (YC)).

1. Public improvements identified as:
    a. Infrastructure, which will be accepted for operation and maintenance by the City of Cottonwood
    b. A City-operated, Special District
    c. An independent Special District, which does not have its own requirements in these areas
    d. For any subdivision of land use permit, where the improvement is determined to be of sufficient public benefit that compliance with these standards is required by the conditions of approval

D. Additionally, the EDSM establishes requirements for grading on private property. Article 2 provides more information on grading requirements. Final authority for City approval of improvement plans, or acceptance of constructed improvements, rests with the City Engineer.

1.3 REGULATIONS & PLANNING

1.3.1 City Codes, Ordinances & Regulations

A. The EDSM clarifies and supplement requirements in the Cottonwood Municipal Code (CMC), COC Zoning Ordinance (CZO), COC Subdivision Ordinance (CSO), Maricopa Association of Governments (MAG), Uniform Standard Specifications and Standard Details for Public Works Construction, Drainage Design Manual for Yavapai County, Arizona Department of Transportation (ADOT) and other local, state and federal codes and regulations applicable for development within the City.

B. The EDSM is not intended to interfere with, abrogate, or annul any other ordinance, rule or regulations, statute, or other provision of law except as provided herein. Where any provision of the EDSM impose restriction different from those imposed by any other provision of law, the provision that is the more restrictive or imposes higher standards upon development and use of land shall govern.

1.3.2 Comprehensive Planning

The City has adopted a General Plan, as well as several area specific plans, as planning documents for future development within the City. The City has developed water, sewer, drainage, and transportation master plans to ensure that future infrastructure improvements are achieved through an orderly development of the City planning areas. Developers and engineers shall review these document to assure any proposed new developments or improvements are in concert with the City's future growth objectives.

1.3.3 Other Regulatory Agencies

Regulatory permits and/or agreements may be required by other State and Federal agencies. This includes but is not limited to, the Arizona Department of Water Resources (ADWR), Arizona Department of Environmental Quality (ADEQ), Arizona Department of Transportation (ADOT), Yavapai County Environmental Services Department (YCESD), and the U.S. Army Corps of Engineers (USACE). Approval of any improvement plans of

construction activity by the City does not exempt the project owner from the requirement to comply with the regulations of any of these agencies. Prior to construction of public improvements, the Developer shall provide copies of all such permits to the Public Works Department, or document that such permits are not required.

1.4 DEFINITIONS

In the EDSM, the intent and meaning of the terms that are used shall be as defined in Section I of the State Specification except as noted or revised herein.

A. Bedrock: The solid and/or undisturbed in place either at the ground surface or beneath surface deposits of gravel, sand or soil.
B. Building Official: The Building Official of the City of Cottonwood Community Development Department.
C. City: The City of Cottonwood (COC), Arizona
D. City Engineer: the City of Cottonwood, City Engineer
E. Clearing & Grubbing: The removal of any plant, bush, tree, cacti, or earth or rock
F. Contractor: Any person or persons, firm, partnership, corporation or combination thereof, who has/have entered into a contract with any person, persons, corporation, company, special district, or the City of Cottonwood as party or parties of the second part, or his/her/their legal representatives, for the construction of any public improvement or portion of any public improvement within the City of Cottonwood or its service area.
G. Department: The City of Cottonwood acting by and through its Department of Public Works, including the Director and his/her duly authorized representatives, either employed by or contracting with the department, acting within the scope of the particular duties delegated to him/her
H. Developer: The owner of his/her designated representative, of land where any public improvement, is proposed to be constructed
I. Director: The Director of the Department of Public Works, City of Cottonwood, acting directly or through his/her duly authorized representatives, either employed by or contracting with the Department, acting within the scope of the particular duties delegated to him/her
J. Earthwork: The cut, fill, import or disposal of excess earth, sand, gravel, rock or other earthen material
K. Engineer: Engineer shall mean City Engineer of the Department of Public Works, of the City of Cottonwood, acting directly or through his/her duly authorized representatives, either employed by or contracting with the Department, acting within the scope of the particular duties delegated to him/her
L. Engineer of Record (EOR): The Project Engineer designated by the Developer as being responsible in charge of civil engineering work as defined in A.R.S. Title 32, Professions and Occupations
M. Engineering Design Standards Manual (EDSM): The Design Standards, Construction Specifications and Standard Details, which comprise this volume, along with all other standard references incorporated herein

N. Excavation: Any act by which earth, sand, gravel, rock, or other earthen material is cut into, dug, uncovered, displaced or relocated, and shall include the conditions resulting there from

O. Existing Grade: The grade or elevation of the existing ground surface prior to excavating or filling

P. FEMA: The Federal Emergency Management Agency (FEMA)

Q. Fill: Deposits of soil, rock, or other materials placed by humans

R. Finish Grade: The final grade or elevation of the ground surface after grading is completed

S. Grading: Any excavating, filling, moving of natural earthen ground surface or combination thereof, and shall include the conditions resulting from any excavation, fill or movement of the natural earthen ground surface, including the natural drainage pattern

T. Laboratory: Any testing agency or testing firm, which has been licensed by the State of Arizona to act in such capacity, and meeting the requirements of the City Engineer

U. NPDES/AZPDES: The Federal National Pollution Discharge Elimination System (NPDES) Program administered normally pursuant to 33 U.S.C. Section 1342 and the Arizona Pollution Discharge Elimination System (AZPDES) Program administered in Arizona pursuant to Arizona Revised Statutes, Title 49, Chapter 2, Article 3.1, requiring the control or elimination of erosion and other forms of water pollution from a site

V. Public Improvement: Improvements, which will be accepted for operation and maintenance by the City of Cottonwood, including any subdivision or land use permit where the improvement is determined to be of sufficient public benefit that compliance with these standards is required by the conditions of approval

W. Retaining Wall: A wall, which supports earth higher on one side than the other side (measured from the top of the footing to the top of the retaining wall)

X. Right of Way: The full width of land owned (fee) or controlled (easement) by the City, upon which the traveled way is constructed, and which usually extends considerably beyond the edge of pavement (or traveled way) to the boundaries of the adjacent private properties

Y. Right of Way Permit: Authorization by the Department to conduct work, reconstruct or place improvement in established or proposed City rights of way or easements

Z. Rough Grade: An approximate elevation of the ground surface conforming to the proposed design

AA. Service Area: Those parcels located within an area identified by ADWR and ADEQ that receive utility services (i.e. water and/or wastewater) by the City of Cottonwood

BB. Site: Any lot or parcel of the land or contiguous combination thereof, under the same ownership, where grading is performed or permitted

CC. Soil: All earth material of whatever origin that overlies bedrock

DD. State: When the State Specifications are applicable, the word “State” as used in the State Specifications shall mean the State of Arizona and its political subdivision, City of Cottonwood

EE. State Standard Specification: The latest edition of the ADOT Standard Specifications for Road and Bridge Construction, and of the associated Standard Plans (ADOT Roadway Design Construction Standard Drawings), of the State of Arizona, Department of Transportation (ADOT)

ARTICLE 2: GRADING

2.1 INTRODUCTION

2.1.1 Purpose

A. The purpose of this Article is to promote health, safety, and public welfare by establishing minimum requirements for regulating grading activities. This Article provides standards, guidelines and design criteria for the design and construction of grading, drainage and site restoration projects within the City of Cottonwood (COC). Article 2 sets forth rules and regulations to control earthwork construction, including excavation embankments.

B. This Article is complimentary to the Cottonwood Municipal Code (CMC), the Cottonwood Zoning Ordinance (CZO), the Cottonwood Subdivision Ordinance (CSO), and other Articles of the Engineering Design Standards Manual (EDSM).

2.1.2 Applicability

A. A. The standards and guidelines of this Article shall apply to any moving, relocating, cutting or filling of earth within the City of Cottonwood. A grading and drainage plan and permit are required under the following circumstances:

   1. For any cut and/or fill of dirt that exceeds fifty (50) cubic yards (CY), or clearing and grubbing of more than ten thousand (10,000) square feet (SF)
   2. A grading permit may also be required for grading which is less than fifty (50) CY, if the work impact's drainage on adjacent upstream and/or downstream properties, and/or for a structure

B. The guidelines of this section shall not apply to the following development activities:

   1. Selective thinning of vegetation for fire control as approved by the Fire Department
   2. Individual single-family home construction may be exempt, where slopes are less than twenty (20%) percent or where the site will not be subject to mass grading if meeting the requirements above

2.1.3 Design Standards & Guidelines

A civil engineer registered in the State of Arizona shall analyze, design and seal all grading and drainage plans or associated analysis for projects that meet the requirements noted above.

2.1.4 State Regulations

A. Permits issued under the requirements of this Article shall not relieve the permittee of the responsibility for securing required permits for work to be done that is regulated by any other ordinance, department, or division of the City of Cottonwood or other governing agency.

B. All grading work is subject to the requirements of the National Pollution Discharge Elimination System (NPDES) and Arizona Pollution Discharge Elimination System (AZPDES). Refer to EDSM, Article 3, Stormwater Management, and CMC, Title 15.
    1. Before a grading permit is issued, the developer shall submit to the City Engineer a Notice of Intent (NOI), issued by the Arizona Department of Environmental Quality (ADEQ).

2.2 GENERAL INFORMATION

A. The issuance of a permit or the approval of construction documents and specification shall not be construed to be a permit for, nor an approval of any violation of or deviation from the provisions of this Article or any other ordinance, law, rule or regulation.
B. No clearing and/or grubbing of a site shall occur without first receiving a grading permit. When clearing and/or grubbing has commenced, the site shall be continuously worked until all infrastructure is completed and all erosion control measures and slope stabilization have been completed.

2.3 GRADING STANDARDS & CRITERIA

2.3.1 Grading Standards

A. Portions of the site or lot to be disturbed shall be clearly identified on the grading plans as the "disturbed area(s)" or "disturbed area envelope". Grubbing, grading, and clearing may only occur within the disturbed area(s) identified on the approved grading plan. Portions of the site or lot not identified as disturbed area(s) may not be used for stockpiling materials.
    1. All corners of the proposed site shall be clearly staked by a Registered Land Surveyor before any clearing, grubbing or grading begins.
    2. For larger areas of development, where grading will not occur within two hundred (200') feet of the property boundary, an alteration or modification per EDSM, Article 10, may be requested.
B. Drainage shall be directed away from all structures per the International Building Code.
C. All residential development shall comply with the following requirements:
    1. The maximum height of an exposed vertical cut or fill shall not exceed thirty five (35') feet and will require a design and certification from a Registered Geotechnical Engineer.
    2. The maximum length of an exposed vertical cut or fill shall not exceed one hundred fifty (150') feet.
D. Commercial development shall not be restricted in terms of height of cut or fill, subject to the soil stability analysis and scarring mitigation.
E. All fills shall be compacted to not less than the minimum densities as listed below and as determined in accordance with ASTM D698. ASTM D1556 or D6398 shall determine Field density.

TABLE 2-1: FILL COMPACTION

LOCATION	MINIMUM DENSITY*
Within the Building Envelope	95%
Parking Lots, Driveways, Roads & Sidewalks	95%
Yards &Open Space	75%

*Unless a modification is indicated based on a geotechnical report, sealed by a Registered Geotechnical Engineer.

F. The area over which fills are to be placed shall be cleared of all trash, trees, stumps, timber, debris of other material not suitable as a foundation for fill.

G. Edges of cuts and fills shall conform to the natural topography of the land by reshaping.

H. Cuts and fills on slopes that encroach into a local drainage tributary (i.e. non-FEMA stream) shall be identified and armored to protect against a 100-year storm event.

I. Excess material shall be handled per the City approved grading plan, or removed to a City approved off-site disposal area.

J. All site re-vegetation shall be completed within ninety (90) days of completion of grading work, or prior to release of Financial Assurances or issuance of a certificate of occupancy, whichever occurs first.

K. Where natural areas or preserved vegetation is designated on a site or lot, temporary fencing shall be installed where they abut construction areas in order to prevent site disturbance of natural areas.

L. Cut and fill slopes shall be shown on the plans. Slopes steeper than two to one (2:1) (horizontal to vertical) shall require a slope stability analysis prepared by a Registered Geotechnical Engineer. Additionally, slope stability analysis for slopes flatter than two to one (2:1) may be required at the discretion of the City Engineer.

M. The top of cut slopes shall be located a minimum of five (5’) feet inside the subject property boundary. Buildings located at the bottom of a cut slope shall be located a minimum of five (5’) feet away from the hinge point of the cut slope and shall be sloped a minimum of six (6”) inches per ten (10’) feet (6”:10’) away from the building. Refer to Exhibit, No 1.

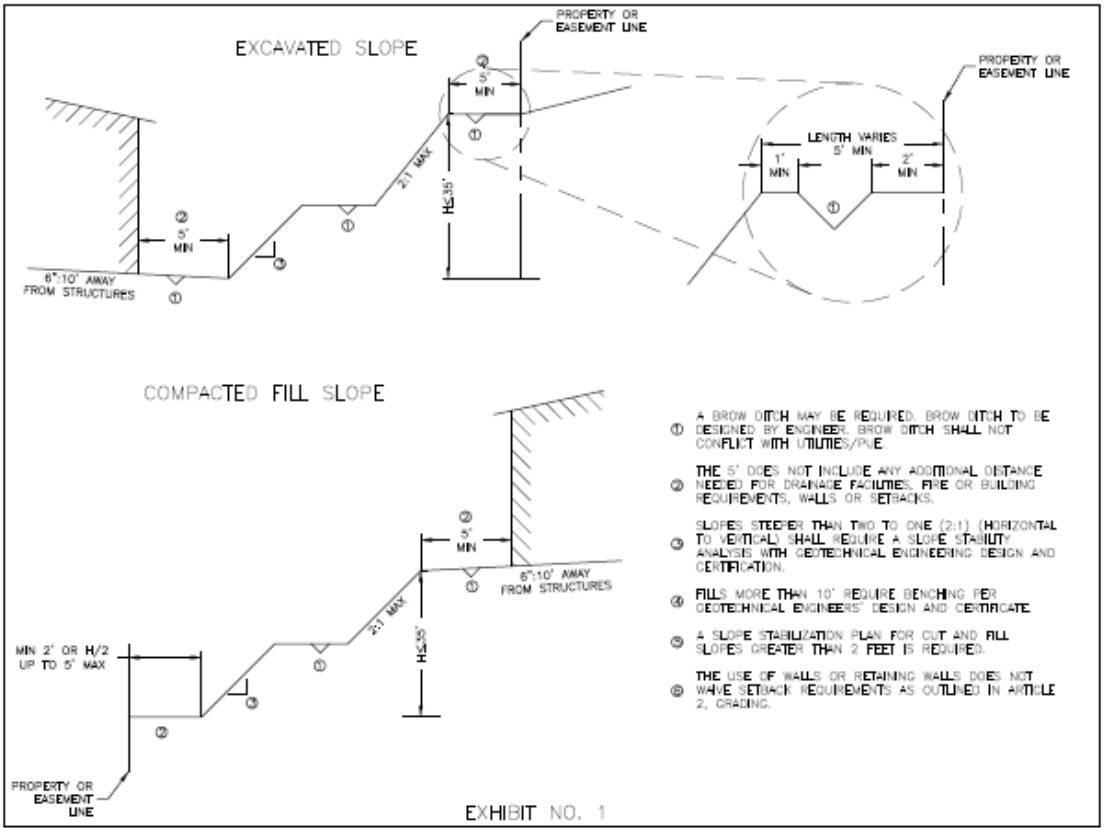

N. The toe of fill slopes shall not extend into public right of way (ROW), adjacent property, proposed easements or existing easements. The toe of fill slopes shall be setback inside the subject property line a minimum of two (2') feet or one half (½) the fill height up to a maximum of five (5') feet.

O. Buildings located at the top of a fill slope shall be located a minimum of five (5') feet away from the hinge point of the fill slope and shall be sloped a minimum of six (6") inches per ten (10') feet (6":10') away from the building.

P. Fill placed over existing terrain steeper than four to one (4:1) (horizontal to vertical) shall be supported on horizontal benches cut into native competent material. The Registered Geotechnical Engineer shall provide recommendations for the placement of material and bench design.

Q. Brow ditches shall be provided on the top of slopes to prohibit drainage over and/or down the slopes. The drainage shall be conveyed to a natural or manmade drainage system to minimize erosion.

R. The natural historical drainage patterns shall be maintained at the property lines. This would include drainage locations, flow rates, velocity, sediment transport and yield, and the direction of flow off the property.

S. All culverts and backfill materials shall meet minimum H20 loading requirements per the American Association of State Highway and Transportation Officials (AASHTO), including those culverts located at driveways.

T. Slope stabilization is required for all grading work with cut and fill slopes two (2') feet or higher. Single-family Subdivision, Single-family development on individual lots, commercial site developments,

commercial subdivisions, single commercial sites disturbed prior to building permit, public and private rights of way shall include slope stabilization and/or landscape plans for all areas disturbed during construction. Plans for the slope stabilization shall be submitted as a part of the civil infrastructure plans or commercial building plans.

1. Bank Stabilization Standards:
    a. A bank stabilization plan, for cut and fill banks two (2') feet high, within and outside of the right of way, shall be included with project permit applications (e.g. Building Permit, Grading Permit, Paving Permit).
    b. A Landscape Architect or Licensed Landscaper shall prepare stabilization plans for banks greater than eight (8') feet, visible from streets and shall submit such plans for City approval. Where structural designs are required, a registrant shall design and seal the plan.
2. Bank Stabilization Options:
    a. Re-vegetated banks are required where practical and may include combination of reseeding/seed mats, trees, shrubs, groundcover, rock and riprap. Plant type, size and coverage shall be sufficient to stabilize and begin restoring within three (3) years.
    b. Temporary automatic irrigation is required to establish plants and permanent drip may be required for highly visible planted banks. Planted surfaces shall be amended with topsoil a minimum of three to six (3" – 6") inches deep, and shall be sufficiently laid back to support plantings.
        i. A minimum of two to one (2:1) (horizontal to vertical) north facing, two and one half to one (2.5:1) (horizontal to vertical) east facing and three to one (3:1) (horizontal to vertical) south and west facing to permit terracing with steeper faces between planted platforms.
    c. Manufactured banks greater than eight (8') feet high, visible from nearby streets or neighborhoods, shall be formed to create a more natural appearance (e.g. a combination of rough-cut, undulating, and/or rounded toe and top of slope), and terraced where possible to improve plant establishment.
    d. Retaining walls, where visible from streets or nearby neighborhoods, shall be terraced or treated to blend into the natural landscape (e.g. tinted concrete, rock facing, slump block, railroad ties, and/or plantings). Unfinished poured concrete and unfinished concrete block walls are not permitted where visible from streets and nearby neighborhoods.
    e. Unplanted banks are permitted for exposed bedrock cuts, or where the building will effectively screen the cut and/or fill bank in a timely manner. Where bedrock cuts higher than eight (8') feet are visible from streets or neighborhoods, they shall be formed to create a more natural appearance (e.g. a combination of rough-cut, undulating, and/or rounded toe and top of slope). Additional treatment of cut faces

may be required to stabilize soil and reduce scarring effects, based on proven effective technologies and products.

i. All bedrock cuts higher than eight (8') feet must be included in a geotechnical report, including soil loading calculations, and sealed by a Registered Geotechnical Engineer.

U. All material placed, as fill shall be bladed and graded to a uniform surface.

V. Fills in non-hillside areas that are made for yard purposes and which do not exceed eighteen (18") inches in depth are not required to be compacted.

W. The material used for fill shall be approved by a Registered Geotechnical Engineer prior to use when the fill is to support foundations of structures. No organic material shall be permitted in fills. When the fill material includes large rocky or hard lumps, such as hardpan or cemented gravel, which cannot be broken readily, such material shall be well distributed throughout the fill. Sufficient earth or other fine material shall be placed around the larger material as it is deposited to fill the interstices and produce a dense, compact fill. However, such material shall not be placed within two (2') feet of the finished grade of the fill.

X. Fills greater than ten (10') feet will require benching, per an analysis and design performed by a Registered Geotechnical Engineer.

2.4 PLAN SUBMITTAL REQUIREMENTS

2.4.1 Submittals

A. The applicant shall complete a grading permit application.

B. Three (3) copies of grading and drainage plan, a minimum of twenty two by thirty four (22" x 34") inches in size, on bond paper in accordance with approved City of Cottonwood CADD standards. The plans shall include the following:

1. Existing contours at a maximum interval of two (2') feet with elevation labels at ten (10') foot intervals, which extend at least one hundred (100') feet beyond the perimeter of the property.
    a. Spot elevations shall be shown where the contours do not clearly depict the slope direction of drainage flow.
    b. The City Engineer may modify this requirement per the EDSM, Article 10, based on the existing topography or scope of the project.
2. Location of all existing structures, walls (either free standing or retaining), curbs, gutters, sidewalks, streets, all utilities, wells, culverts, channels or other drainage improvements.
3. Property lines and all existing recorded easements.
4. City/County jurisdictional lines.
5. The 1 percent annual chance (100-year) Federal Emergency Management Agency (FEMA) designated Special Flood Hazard Area (SFHA) limits shall be delineated.
6. Proposed culverts, including location and dimensions of detention basin(s), and drainage structures or improvements.

7. Finish pad and finish floor elevations, “hinge point” elevations and invert elevations for culverts, channels and/or drainage swales.
8. Profile for all culverts, manholes and inlet structures, showing both existing ground and proposed finished ground/grade profile, for the entire length of the culvert.
9. Inlet and outlet elevations for all culverts, manholes and inlet structures.
10. All proposed cut and fill slopes with (horizontal to vertical) slope.
11. A profile depicting the existing and proposed grading, with all proposed slopes, clearly labeled.
12. Walls, both free standing and retaining shall have elevations for top of footing and top of wall:
    a. Walls and footings shall be installed entirely within the property on which they are permitted.
    b. Wall and footings on lots located entirely within a subdivision development that is under ownership of the developer, may be on the shared property line of the subject parcel(s).
13. Estimate the cubic yards of material to be moved on the project including both import and export.

C. Drainage Analysis (Refer to Engineering Design Standards Manual (EDSM), Article 3, Stormwater Management).

D. A Notice of Intent (NOI) issued by ADEQ.

E. A Geotechnical Report. The report shall identify structural soil properties and recommendations for compaction. A minimum ninety five (95%) percent of maximum density and structural fill is required. If the site requires import, the Geotechnical Report must provide recommendations for compaction and structural fill of the import material.

F. Project, which disturb one (1) acre or more or are a part of a larger common plan of development, or subdivision that would result in the accumulated disturbance of one (1) acre or more will require a complete Storm Water Pollution Prevention Plan (SWPPP) binder in conformance with the Arizona Department of Environmental Quality (ADEQ). The SWPPP shall include a Notice of Intent (NOI) from ADEQ and a Sediment and Erosion Control Plan, which includes permanent stabilization and/or landscape plans.

G. The Engineer of Record (EOR) shall provide the location of any site, which is providing import to the project, or any site to which export is taken. A grading plan or stockpile plan including a SWPPP to control erosion at the off-site location shall be provided for all off-site import/export locations. For some projects, the EOR may not have this information at time of plan submittal. In this cast, the grading contractor shall provide this information prior to a permit being issued.

H. Any other items deemed necessary by the City Engineer.

2.5 PRELIMINARY GRADING

2.5.1 Preliminary Grading Permit

A. An “At-Risk Grading Permit” is defined as a grading permit that is issued:

1. Prior to recording of the Final Plat
2. Prior to issuance of a permit for approved civil improvement plans
3. Prior to issuance of a permit for approved building permit

B. The City of Cottonwood may consider request for an "At-Risk" grading permit, on a case by case basis, under specific conditions as follows:
   1. Each request will be considered independently on its own merit. In no case shall an At-Risk grading permit be guaranteed for every project.
   2. If the applicant has met the requirements of this code and the issuance of an At-Risk grading permit will not be detrimental to surrounding property owners the City Engineer may, at his discretion, issue a preliminary grading permit.

C. Application for an At-Risk grading permit shall include all items outlined in the EDSM, Section 2.4.

2.6 GRADING PERMIT

A. The Grading Permit may be issued when a complete submittal per EDSM, Sections 2.3 and 2.4 have been submitted, reviewed and approved by the City Engineer. The issuance of a grading permit shall constitute an authorization to do only that work which is described or illustrated on the permit application, plans and specifications.

B. Financial Assurances are required at the time of the permit issuance in an amount equal to one hundred and ten (110%) percent of the engineer's estimate of cost for grading and one hundred and twenty (120%) percent of the engineer's estimate of cost for slope stabilization, as stated in the City of Cottonwood Subdivision Ordinance (CSO).

C. Grading Permits are valid for a period of six (6) months form the date of issuance. If the work has not commenced within six (6) months of the issuance date, or the work has been discontinued for more than six (6) months from the last "Approved" inspection, the permit will expire.
   1. If the permittee is unable to complete the work within the specified time, a request may be made prior to the expiration of the permit in writing, to the City Engineer for an extension of time. The letter shall set forth the reasons for the requested extension. If, in the opinion of the City Engineer, such an extension is warranted, he may grant additional time for the completion of the work.
   2. If a permit expires, the permit must be re-submitted for review and approval prior to any work commencing. Expired plans and permits shall adhere to the most currently adopted Cottonwood Municipal Code (CMC), Engineering Design Standards Manual (EDSM), Cottonwood Zoning Ordinance (CZO), Standard Details, Specifications and fees.

D. In granting any permit under this Article, the City Engineer may attach such conditions as may be reasonably necessary to prevent the creation of a nuisance or hazard to public or private property. Such conditions may include, but shall not be limited to:
   1. Requirements for fencing of excavations or fills, which would otherwise be hazardous.
   2. Improvement of any existing site condition to bring it up to the standards of this Article.

3. Temporary fencing of protected hillside and desert preservation areas, prior to commencing grading operations.

E. Neither the issuance of a permit under the provisions of this Article nor the compliance with the provisions hereof, or with any conditions imposed in the permit issued hereunder, shall relieve any person from responsibility for damage to other persons or property, nor impose any liability upon the City for damage to other persons or property.

2.7 FLOODPLAIN MANAGEMENT

If the site is impacted by a FEMA designated floodplain or floodway, refer to CMC, Title 18.

2.8 BLASTING

No blasting shall occur within the City Limits without a Permit first being issued from the City Engineer. CMC, Title 9.08.020 - Explosives regulates blasting activities. Additional restrictions and City Council approval are required to extend blasting hours.

2.9 RETAINING WALLS

Retaining walls, of any type, exceeding two (2') feet in height shall require a permit from the City of Cottonwood Building Division. The height of the retaining wall shall be measured from the finish grade at the bottom of the footing to the top of the wall. Retaining walls less than two (2') feet that have a surcharge loading from structures and/or vehicle require a permit. All retaining walls shall require a design from a Registered Professional Engineer.

2.9.1 Permit Documents

A. A completed grading permit application.

B. A site plan showing property lines, existing structures, easements, streets, right of ways, required setbacks, and both natural and proposed drainage features.

C. Retaining Walls:
   1. Show location(s), cross section(s), footing, height, finish grade elevations at base and top of wall, backfill and drainage provisions.
   2. Structural analysis and design prepared by an Arizona Registered Professional Engineer.

D. Segmented "dry stacked" Walls:
   1. Show location(s), cross section(s), footing, height, finish grade elevations at base and top of wall, backfill and drainage provisions.
   2. Include manufacturer's specifications, design, structural analysis, and construction recommendations.
   3. Structural analysis and design prepared by an Arizona Registered Professional Engineer.

E. Stacked Boulder Wall:
   1. Show location(s), cross section(s), footing, height, finish grade elevations at base and top of wall, backfill and drainage provisions.

2. Structural analysis and design prepared by an Arizona Registered Professional Engineer.

2.9.2 Inspections & Testing

A. The Design Engineer and Geotechnical Engineer shall perform special inspection of the retaining wall construction and compaction testing of the backfill material.

B. Upon completion of the retaining wall, the Structural Engineer and the Geotechnical Engineer shall submit a stamped sealed certification stating the wall was constructed per the approved civil plans and specifications. The certification shall include the compaction results.

2.9.3 Exceptions

A. Retaining Walls less than two (2') feet in height that are used for landscaping or decorative purposes with no surcharge shall not require a Structural Analysis or Geotechnical Report.

B. Slopes that are steeper than two to one (2:1) (horizontal to vertical) shall require stabilization to control erosion using approved methods recommended by a soil analysis prepared by a Registered Geotechnical Engineer.

ARTICLE 3: DRAINAGE

3.1 INTRODUCTION

3.1.1Purpose

The purpose of this Article is to regulate the analysis and design of all Stormwater management facilities within the corporate limits of the City of Cottonwood, Arizona. In this context, the term Stormwater includes consideration of all aspects, including capture, conveyance, and quality of such waters. Although we have attempted to place all Stormwater related requirements into one section, the Cottonwood Municipal Code (CMC) includes other sections where Stormwater requirements are stated. In cases of conflict with other City ordinances, the more restrictive or conservative of the two shall apply.

3.1.2 Applicability

The standards and guidelines of this Article shall apply to the analysis and design of all Stormwater related facilities for both public improvement and private development and redevelopment projects, within the City of Cottonwood.

3.1.3 Design Standards & Guidelines

Use of this Article does not supersede the need for acquiring various permits or authorizations by the Federal Emergency Management Agency (FEMA), Environmental Protection Agency (EPA), U.S. Army Corps of Engineers (USACE), State of Arizona, Yavapai County, other City of Cottonwood departments, or any other governing agency having jurisdiction. It is the responsibility of the project owner, project professionals and contractors, to comply fully, with all applicable regulations.

3.1.4 General Information

A. This Article is intended to act as a guide for implementing policies and design criteria specific to the City of Cottonwood. It represents a minimum standard that the City has determined to be appropriate for a wide variety of projects within the City that takes into account the unique terrain, weather, and experiences of the Cottonwood area. The full responsibility for adequacy of the design remains with the Engineer of Record (EOR). Approval by the City does not alter that professional liability.
B. This Article refers to hydrologic and hydraulic analysis methods and design procedures contained in reference manuals published by various Federal, State, and County government agencies. The intent is to utilize those public resources where design methodologies are thoroughly presented, and widely accepted.

3.2 DRAINAGE REPORTS & PLANS

3.2.1 Purpose

A. The purpose of this section is to present criteria for submittal of drainage reports, floodplain studies, grading and drainage plans, and public drainage improvement plans to the City of Cottonwood for review and approval.

B. Drainage reports and engineered grading plans are required to:
   1. Analyze the impact that the proposed project will have on Stormwater discharges.
   2. Provide adequate data to ensure that the project is designed to be protected from flooding and conforms to applicable floodplain and Stormwater management regulations.
   3. Provide data for the design of public and private drainage facilities.

C. Drainage reports shall be of sufficient detail to demonstrate that the development or project will not create drainage or flooding problems and that any on-site drainage facilities are properly sized to detain and/or convey the design storm flows.

3.2.2 Drainage Report & Plans Required

A. Drainage reports and construction plans will be required for the following land development activities:
   1. All subdivisions (residential and non-residential)
   2. Any commercial, industrial, or multi-family site improvements
   3. Public improvements involving new streets, culverts, storm drains, open channels, private/public detention facilities, or other drainage infrastructure
   4. Other projects at the discretion of the City Engineer

B. A drainage report for subdivision activity shall be submitted with all Preliminary Plat and Final Plat submittals, per the Cottonwood Zoning Ordinance (CZO) and Cottonwood Subdivision Ordinance (CSO).

C. A drainage report is not required for individual single-family residential sites, unless there are significant off-site flows that enter the site.

D. A drainage report is not required for minor site modifications that have no impact on the existing drainage paths and/or systems, at the discretion of the City Engineer.

E. A drainage report may be required for any building permit, floodplain use permit, or grading permit if the City Engineer determines site conditions warrant its necessity.

F. Drainage reports and construction plans submitted for review, shall be prepared and sealed, by an Arizona Registered Professional Engineer.

G. Final drainage reports shall include a data disk (CD/DVD of USB Flash Drive) containing all calculational spreadsheets and models, as well as a PDF version of the final sealed report.

3.2.3 Preliminary Drainage Report

A. A preliminary drainage report shall be submitted at the preliminary plat phase for subdivisions, when required by the CZO, CSO, or when requested by the City Engineer.

B. The purpose of the Preliminary Drainage Report is to conceptually define the nature of the proposed development or project, describe all existing drainage conditions and anticipated proposed conceptual drainage facilities needed to conform to the requirements of the Cottonwood Municipal Code (CMC).

C. The preliminary drainage report shall be written as a stand-alone document:
    1. When references are made or assumptions are based on previously approved reports, the preliminary drainage report must include the appropriate excerpts, pages, tables, and maps containing the referenced information.
    2. Assumptions made in previous drainage reports must be verified and substantiated.
    3. All previously approved reports submitted should be clearly and cleanly reproduced. Photocopies of charts, tables, nomographs, calculations, or any other reference material must be legible.

D. The following shall be included in a Preliminary Drainage Report:
    1. Cover Page:
        a. Project name, address, and COC permit number (once assigned)
        b. Date of report and any revision dates
        c. Name, address, and phone number of developer/owner
        d. Name, address, and phone number of engineering firm
        e. Seal/Signature of an Arizona Registered Professional Engineer responsible for preparing the report
    2. Table of Contents:
        a. List Section Headings and their Respective Page Numbers
        b. List Tables with Page Numbers
        c. List Figures with Page Numbers
        d. List of Attachments, Numbered
    3. Location:
        a. Township, range, section, ¼ section, subdivision, and parcel number(s)
        b. City, county, state highway and local streets within and adjacent to the site of the area to be impacted by the drainage improvements
        c. Names of surrounding developments, land use, and zoning classifications
    4. Description of Property:
        a. General project descriptions, including existing and proposed land use
        b. Topographic features, slopes, and acreage
        c. Soil and vegetative cover (types of vegetation, hydrologic soil group)
        d. Existing drainage and irrigation facilities such as ditches, canals, channels and improvements
        e. Existing drainage easements within and adjacent to the site
    5. Major Drainage Basins and Sub-basins:
        a. Major Basin Description (on-site and off-site)

i. Reference to existing major drainageway planning studies such as the City of Cottonwood Area Drainage Master Plan, major drainageway reports and flood insurance studies (FIS) and rate maps (FIRMs), including a copy of current FIRM(s) or FIRMettes, showing the location of the subject property
ii. Identify the Federal Emergency Management Agency (FEMA) Effective Flood Zone Designations that affect the property
iii. Existing major basin drainage characteristics and planned land uses within the basin, as defined by the CSO
iv. Soils Classification Map for the subject property boundary and contributing watershed clearly labeled.
    1. Reference the source, such as Natural Resources Conservation Service (NRCS)
v. Identification of all existing drainage facilities and/or detention basins that contribute to, or will be affected by, the proposed project within one hundred (100') feet of the property.

b. Sub-basin Description
    i. Historic drainage patterns of the property in question
    ii. On-site and off-site sub-basin characteristic

6. Drainage Design Criteria:
    a. Hydrologic Analysis & Design
        i. Identify design rainfall
        ii. Identify hydrologic soil group(s)
        iii. Identify runoff calculation methodology
        iv. Compute existing and developed peak flows for all sub-basins for the 2-year, 10-year, 25-year, 50-year and 100-year design storm events
        v. Summary table of pre and post-development sub-basin peak discharges and estimated storage volume requirements
    b. Hydraulic Analysis & Design
        i. Provide methodology and approximate 100-year water surface limits for all watercourses affecting the property with flows greater than fifty (50) cubic feet per second (cfs)
        ii. Provide a description of the methodology and assumptions for analysis and design of anticipated stormwater conveyance facilities
7. Drainage Facility Design:
    a. Provide a description of the types and locations of anticipated stormwater conveyance facilities to be utilized in the proposed project
    b. Show anticipated stormwater detention locations
    c. Provide stormwater detention basin size and depth estimates
    d. Identify drainage easement or tract locations internal to the project boundary

e. Identify the anticipated parties responsible for maintenance of all proposed drainage facilities

8. References:
   Reference all criteria, master plan, design software and technical information used in support of the preliminary drainage design and concept.
9. Appendices:
   a. Hydrologic Computations
   b. Hydraulic Computations
10. Required Maps:
    a. General Location Map
    b. Hydrologic Soils Map, with site location and watershed boundaries clearly shown and labeled
    c. Effective FEMA FIRM Map(s), with project boundary clearly shown and labeled
    d. Pre-development Drainage Area Map:
       i. Existing topographic contours and drainage flow paths
       ii. Major basin and sub-basin boundaries shown and labeled per summary table nomenclature
       iii. Project boundary shown and labeled
       iv. Pre-development runoff summary table
    e. Preliminary Post-Development Drainage Area Map:
       i. Twenty two by thirty four (22” x 34”) inches in size at a scale of one inch equals twenty feet (1” = 20’) to one inch equals one hundred feet (1” = 100’)
       ii. Existing (dashed) and proposed (solid) contours at two (2’) foot intervals to show details of the drainage flow patterns both on and off-site, extended a minimum of one hundred (100’) feet beyond the property boundary
       iii. Existing and proposed property lines, right of way (ROW), and roadways
       iv. Existing buildings within one hundred (100’) feet of the property and proposed building locations, if applicable
       v. Preliminary post-development drainage basin and sub-basin boundaries shown and labeled, per runoff summary table nomenclature
       vi. Pre and post-development runoff summary table
       vii. Hydrologic design point locations, matching summary table nomenclature
       viii. Location of all existing and proposed utilities affected by, or affecting the drainage design
       ix. All existing and proposed conceptual drainage facility locations, including culverts, headwalls, inlets, storm drain systems, and detention basins
       x. Existing 1 percent annual chance (100-year) floodplain boundary for all FEMA designated floodplains and all watercourses with flows greater than fifty (50) cfs

xi. Any off-site feature or basin affected by the development
xii. Include North arrow, scale, benchmark, and flow arrows
xiii. Legend to define map symbols and line types
xiv. Project name, address, engineering firm and seal, and date in title block

3.2.4 Final Drainage Report

A. A final drainage report shall be submitted with final construction plans for all project types as noted in Section 3.2.2, or when required by other portions of the Cottonwood Municipal Code (CMC), or at the request of the City Engineer.
B. The purpose of the Final Drainage Report is to finalize the hydrologic analysis and hydraulic design computations needed to conform to the requirements of the CMC.
C. The final drainage report shall be written as a stand-alone document. It shall contain, at a minimum, all the elements of a Preliminary Drainage Report with the following changes and additional elements:
    1. Drainage Facility Hydraulics & Design:
        a. Provide a detailed description of the proposed stormwater conveyance systems to be constructed, including method used for hydraulic design such as nomographs, charts, software, etc.
        b. Hydraulic Calculations for Proposed Drainage Conveyance Infrastructure:
            i. Street conveyance capacity
            ii. Channel conveyance capacity
            iii. Culvert capacity, conveyance, and overtopping
            iv. Storm drain capacity and conveyance
            v. Inlet and catch basin locations and sizing calculations
            vi. Outlet and Energy Dissipation Device Design (e.g. riprap sizing)
            vii. Hydraulic Grade Line (HGL) calculations
            viii. Hydraulic loss calculations
            ix. Detailed water surface calculations for all watercourses with contributing watersheds with flows greater than fifty (50) cfs
        c. Proposed Stormwater Detention
            i. Pond location(s), geometry, and freeboard
            ii. Detention volume and stage/storage calculations
            iii. Detention pond inflow/outflow summary table
            iv. Detention pond outfall design and considerations
        d. Other Project Specific Details
            i. Identify and describe other state/federal permits that will be required to construct the proposed project (e.g. CLOMR/LOMR, CWA 401, CWA 404, AZPDES)
            ii. Identify drainage easement or tract locations internal to the project boundary

iii. Identify the parties responsible for maintenance of all proposed drainage facilities (in coordination with plat language)

iv. Provide Geotechnical Engineering Data supporting pertinent channel side slopes of other germane issues.

2. Required Maps:

a. Post Development Drainage Area Map

i. Final post development drainage basins and sub-basins

ii. Existing and proposed stormwater capture and conveyance facility locations, sizes, and naming designations that correspond to summary tables contained in the report and/or appendix

iii. Detention basins, with dimensions, volumes, and release rates noted

iv. Proposed 1 percent annual chance (100-year) floodplain boundary for all FEMA designated floodplains and all watercourses with flows greater than fifty (50) cfs

v. Proposed minimum finished floor elevations reported as the Regulatory Flood Elevation (RFE = BFE + 1.0 feet) for lots subject to inundation by a watercourse or other points of drainage concentration.

3.2.5 Drainage Construction Plans

A. All drainage construction plans shall be submitted on twenty two by thirty four (22” x 34”) inch bond paper at a scale of one inch equals twenty feet (1” = 20’) in a format consistent with the City of Cottonwood CADD Standards.

B. All drainage construction plans shall, at a minimum, contain the following information:

1. Location Map
2. Legend to define map symbols and line types
3. City of Cottonwood (COC) General Notes
4. COC Standard Construction Notes
5. COC Standard Details
6. COC survey datum and ties to COC monuments
7. Special details, notes, and specifications
8. Street names and widths
9. Parcel boundaries and Right of Way lines
10. Floodplain and floodway boundaries, with Base Flood Elevations
11. Existing and proposed topographic contours at two (2’) foot intervals (interval may be increased in steep areas to improve readability)
12. Drainage boundaries and sub-boundaries (optional)
13. Existing and proposed utilities
14. All existing and proposed drainage facilities
15. Stormwater flow directions

16. Stations and offsets for all utility lines and drainage facilities referenced to street stationing
17. Storm drain pipe system stationing
18. Detention facility construction dimensions and details with plan and profile, cross-sections and tabulated volumes
19. Finished Floor Elevations of all existing and proposed structures
20. Finished pad elevations for all building sites
21. Roof and lot drainage directions
22. Paved and landscaped areas
23. Scour protection locations (e.g. rock riprap areas dimensions with D50 size and depth)
24. Limits of grading and disturbance
25. Cut and fill areas identified with slopes labeled and quantities tabulated
26. Survey benchmarks and control points
27. Existing on-site features and improvements, and off-site features that may affect or be affected
28. Storm Water Pollution Prevention Plan (SWPPP) and/or Erosion and Sediment Control (ESC) and permanent stabilization plan sheet(s)
29. Additional information as appropriate to the project

3.2.6 FEMA Designated Flood Hazard Areas

A. If the proposed project contains an area that is designated on the currently effective Flood Insurance Rate Map (FIRM) as being in a Special Flood Hazard Area (SFHA), then a detailed floodplain study is required. The applicant is responsible for preparing and submitting all required supporting documents and Letter of Map Change (LOMC) applications to the Federal Emergency Management Agency (FEMA) in conformance with all local, State, and Federal requirements.

B. The City of Cottonwood will review all floodplain studies for technical compliance and completeness per applicable Arizona Department of Water Resources (ADWR) State Standards and FEMA guidelines. All local and federal review fees associated with map revision requests are the responsibility of the applicant.

3.3 HYDROLOGY

3.3.1 Purpose

This section provides an overview of hydrologic methods and procedures acceptable for use in the City of Cottonwood.

3.3.2 General Policies

A. Pre-development parameters and results shall be consistent with the City of Cottonwood (COC) Area Drainage Master Plan, hydrology results.

B. Runoff calculations shall be performed, at a minimum, for the 2-year, 10-year, 25-year, 50-year and the 100-year return periods, in conjunction with all drainage reports for private developments and public works projects.

C. Hydrology for FEMA flood studies in previously unmapped areas shall be in accordance with current FEMA guidelines and State Standards where such differ from COC development criteria.

3.3.3 Rainfall Data

The rainfall values to be used for development in the City of Cottonwood are shown in Table 3-1. These values were derived from the rainfall depth-duration frequency statistics for Arizona from NOAA Atlas 14, Precipitation-Frequency Atlas of the United States, Volume 1 Version 4: Semiarid Southwest. The SCS Type-II 24-hour storm distribution with Antecedent Moisture Condition II is applicable to the Cottonwood area. Other temporal distributions or durations may be accepted.

TABLE 3-1: RAINFALL DATA FOR CITY OF COTTONWOOD

DURATION	STORM FREQUENCY (YEARS) RAINFALL DEPTH (INCHES) / INTENSITY (INCHES/HOUR)					
	2	5	10	25	50	100
5-min	0.27	0.37	0.45	0.57	0.67	0.77
	3.29	4.46	5.44	6.83	8.00	9.26
10-min	0.42	0.57	0.69	0.87	1.02	1.18
	2.50	3.40	4.13	5.20	6.12	7.08
15-min	0.52	0.70	0.86	1.08	1.26	1.46
	2.07	2.81	3.42	4.32	5.04	5.84
30-min	0.70	0.95	1.15	1.45	1.69	1.96
	1.39	1.89	2.30	2.90	3.38	3.92
60-min	0.86	1.17	1.43	1.79	2.10	2.43
	0.86	1.17	1.43	1.79	2.10	2.43
2-hour	0.99	1.31	1.58	1.97	2.30	2.66
	0.49	0.66	0.79	0.99	1.15	1.33
3-hour	1.06	1.37	1.64	2.02	2.34	2.69
	0.35	0.46	0.55	0.67	0.78	0.90
6-hour	1.26	1.57	1.85	2.24	2.56	2.91
	0.21	0.26	0.31	0.37	0.43	0.49
12-hour	1.49	1.83	2.11	2.48	2.78	3.09
	0.12	0.15	0.18	0.21	0.23	0.26
24-hour	1.77	2.22	2.58	3.06	3.44	3.83
	0.07	0.09	0.11	0.13	0.14	0.16

3.3.4 Time of Concentration

The Time of Concentration (Tc) may be determined by a wide variety of commonly accepted calculation procedures. While no method is specifically preferred or disallowed, any method used shall be appropriate to the watershed being analyzed and compatible with the rainfall loss and hydrograph methods selected. Whichever method is used, it shall be fully documented in the drainage report. Different methods can be used for post-development conditions for on-site development sub-basins. Skewed parameter selection and

unusual results will not be approved. If the calculated Tc is less than five (5) minutes, the rainfall intensity for the five (5) minute duration shall be used (i.e. the minimum Tc is five (5) minutes).

3.3.5 Detailed Hydrologic Methods

A. Hydrologic analysis for predevelopment conditions shall be performed using a detailed hydrologic analysis method. Tabular and graphical approximation methods are only acceptable for preliminary work. Other methods may be approved on a case-by-case basis.
    1. Rainfall Losses
        a. Pre-development condition rainfall losses shall be calculated using a method such as Soil Conservation Service (SCS), preferred or Green & Ampt. These methods are implemented within commonly available modeling software such as the U.S. Army Corps of Engineers Hydrologic Modeling System (HEC-HMS), and are compatible with routing methods used for analyzing detention facilities. (Please note that HEC-1 is not an acceptable version). The results of any method used should be consistent with the City of Cottonwood, Area Drainage Master Plan, hydrology results.
        b. Input Curve Numbers (CN) for the SCS method for predevelopment conditions shall also be consistent with the City's Master Plan, hydrology inputs. Soil mapping data is available through the Natural Resources Conservation Service (NRCS) website. Adjustments based on geotechnical testing of undisturbed native site soils is acceptable. Further information on selection of CN and implementation of the SCS method can be found in the SCS, TR-55 manual.
    2. Hydrographs
        Synthetic unit hydrograph procedures such as Clark, SCS, or Kinematic Wave are acceptable.

3.3.6 Rational Method

The Rational Method is acceptable for design of on-site stormwater conveyance facilities with contributing drainage areas less than one hundred and sixty (160) acres and a Tc less than sixty (60) minutes. Use of the Rational Method, is fully presented in widely available engineering publications. The variation used in the Arizona Department of Transportation (ADOT) Hydrology Manual, is applicable to the Cottonwood area, as modified by criteria presented herein.

3.4 OPEN CHANNELS

3.4.1 Purpose

A. This section applies to all private and public open channels. Requirements for roadside ditches are presented in the Engineering Design Standards Manual (EDSM), Article 7.
B. An open channel is defined as a conveyance in which water flows with a free surface. Open channels in the City of Cottonwood (COC) will either be classified as natural or man-made. A channel is considered to be natural if the cross section geometry, bed slopes, bed and bank materials, vegetative

growth, and overbank floodplain areas have not been altered by previous human activity. Any prior or planned alterations to natural channels may trigger any or all of the policies and requirements of this Article.

3.4.2 General Policies for Natural Channels

A. Developers are encouraged to leave natural channels, including the overbank areas within the 1 percent annual chance (100-year) floodplain, in their natural state.
B. Natural channels with a 100-year peak discharge greater than fifty (50) cubic feet per second (cfs) shall be analyzed using HEC-RAS to delineate the floodplain boundary.
C. Drainage easements shall be created for all natural channels, and shall include the entire floodplain.

3.4.3 General Policies for Man-Made Channels

A. Safety of the general public shall be considered in selecting the location and design of man-made channels.
B. All drainage channels shall include maintenance access and easements to allow periodic maintenance, cleaning and repair.
C. All channels, which will be maintained by the City of Cottonwood, must be within public drainage easements dedicated to, and accepted by, the City of Cottonwood. The City does not maintain channels or drainage facilities on private property, within private drainage easements.
D. Concentrated drainage flows (for all storm frequencies) shall enter and depart from the property to be developed in substantially the same manner and location as under predevelopment conditions, including consideration of depths, widths, and velocities. Substantial deviation from pre-development flow patterns will require written acceptance from affected adjacent property owners and approval by the City Engineer.
E. Drainage channels conveying substantial off-site flows may not be constructed within the right of way parallel to public roadways without prior written permission of the City Engineer. (NOTE: This does not apply to borrow ditches intended to intercept local surface runoff from entering the roadway)
F. No valves, enclosures, transformers, standpipes, poles, mailboxes or other obstructions will be permitted in any open channel, with the possible exception of sanitary sewer manholes, where allowed by the City Engineer.
G. Channel bank soil stabilization and scour protection is required for all channels. Unlined earthen channels are not permitted.
H. The 100-year peak discharge shall be contained in the defined channel cross section, with freeboard, per this Article.
I. Minimum finished floor elevations for structures adjacent to channels shall be at least one (1') foot above the 100-year water surface elevation.
J. Construction activities, which will disturb or alter a natural channel may require permits from other government agencies, such as the U.S. Army Corps of Engineers or Arizona Department of Environmental Quality, to comply with requirements of the Clean Water Act and similar regulatory

programs. Approval by the City of Cottonwood does not supersede or waive compliance with other applicable Federal and State laws.

3.4.4 Channel Design

A. Well established and widely accepted design procedures for opens channels can be found in the current editions of various Federal, State, and County publications. The design engineer shall thoroughly reference and document the procedures and assumptions used and shall adequately demonstrate that the procedure and resultant design is appropriate to the project.
B. The channel cross section geometry, alignment, and bed slope should result in a stable channel with subcritical flow. Grade control structures in combination with energy dissipation measures may be required to limit slopes and velocities.
C. Channel side slopes shall be no steeper than three to one (3:1) (horizontal to vertical) for vegetated channels and two to one (2:1) (horizontal to vertical) for lined channels. Slope stability analysis may be required in some instances.
D. The minimum allowable channel slope shall be one half (0.5%) percent.
E. Channel stabilization measures (including consideration of bank erosion protection, scour protection, and energy dissipation measures) shall be designed for the expected depths, velocities, and shear forces for the 100-year event. The most common channel stabilization methods include turf reinforcement mats, rock riprap, grouted riprap, gabion baskets and mattresses, revetments, concrete, and other biotechnical or synthetic measures. These types of stabilization can be used alone or in combination. Re-vegetation may be acceptable where channel side slopes are three to one (3:1) (horizontal to vertical) or less steep and the underlying soil type is stable for the maximum velocities and forces anticipated.

3.4.5 Freeboard

A. Freeboard is the minimum additional channel depth required between the calculated 100-year water surface elevation and the top of the lowest channel bank.
B. Freeboard shall be calculated by a method that includes consideration of depth, velocity and flow regime. The minimum freeboard is one (1’) foot.
C. Additional freeboard may be required at junctions, channel curves, changes in cross section or slope, culvert outlets, where backwater effects may occur, and at locations where supercritical flow or hydraulic jumps occur.
D. Channel linings of protected open channels shall extend to the elevation necessary to include the freeboard requirement.
E. Freeboard is not required for minor drainage conveyances such as roadside ditches, yard drainage swales on residential lots, and internal surface drainage for commercial or multi-family developments, where finished floors would not be impacted by overflows.

3.5 CULVERTS & BRIDGES

3.5.1 Purpose

A. The purpose of this section is to present policies and criteria for the design and construction of roadway culverts and bridges. Culverts consist of a relatively short length of pipe or multiple conduits used to convey stormwater through a roadway embankment, and are aligned with open channels. Nationally accepted culvert design procedures are presented in publications such as the (Federal Highway Administration (FHWA) Hydraulic Design Series No. 5 (HDS-5), Hydraulic Design of Highway Culverts.

B. Bridges are structures that provide a clear span over a watercourse where the full 100-year discharge is conveyed beneath the lowest structural member (low chord) under the deck. Bridges may be required where other City policies and criteria cannot be met with culverts.

3.5.2 General Policies

A. All roadway culverts shall be designed to convey at least the 25-year frequency flows without roadway overtopping.

B. The allowable depth of weir flow over the roadway for the 100-year storm shall be limited to one (1') foot or less for Local and Collector Streets and one half (0.5') foot for Arterial Streets. This approach is acceptable for crossings where the roadway sags at that point and the overtopping flows can be controlled and redirected into the channel immediately downstream of the crossing. Where overtopping flows cannot be controlled in such a manner, the full 100-year discharge must be conveyed by the culvert pipes, without roadway overtopping.

C. All culvert designs shall provide a controlled path for overtopping flows. The capacity of that path shall include consideration of clogging factors equal to a fifty (50%) percent conveyance reduction. The overflow path shall be designed to withstand erosion and scour for the calculated overflow depths and velocities.

D. Culvert pipes shall not be laid on a curved alignment, nor have horizontal or vertical bends except at a manhole or junction box.

E. The minimum slope for any culvert shall be one half (0.5%) percent, but may need to be steeper to prevent siltation for minor storm events such as the 2-year event.

F. At-grade (ford) crossings for any street classification in new developments are not permitted. They are permissible for private non-commercial driveways.

G. In new subdivisions where roadside ditches or behind-the-curb drainage is proposed, the design engineer shall determine driveway culvert sizes and shall indicate all such sizes on the subdivision infrastructure plans.

H. All driveway culverts that are part of an overall residential drainage system shall be designed to convey stormwater runoff for the 25-year event.

I. The minimum diameter for all roadway crossing culverts shall be eighteen (18") inches. The minimum driveway culvert size is twelve (12") inches.

J. Inundation areas on the upstream side of all culvert crossings for the 100-year event shall be contained within drainage easements. Allowable inundation areas and water surface elevations may also be limited by the potential impacts to existing improvements. Ponded water surface elevations shall be one (1') foot below the finished floor of existing structures.

K. The minimum easement width for culvert pipes forty-eight (48”) inches in diameter or less shall be twenty (20’) feet. For larger diameter or multiple pipe installations, the easement width shall extend at least eight (8’) feet beyond the outside edges of the pipe(s) on each side.

L. Bridge designs shall be evaluated on a case-by-case basis using nationally accepted design standards consistent with the functional classification of the roadway, and in accordance with City of Cottonwood, Engineering Design Standards Manual (EDSM).

3.5.3 Inlet & Outlet Treatment

A. All culvert pipes shall have an appropriate end treatment.
    1. Commercial prefabricated end sections are permitted on culverts thirty six (36") inches in diameter or less. Riprap protection shall extend around and over the top of the end section a minimum of two (2') feet.
    2. Concrete headwalls are required on all culverts greater than thirty six (36") inches in diameter within drainage easements and public right of way (ROW).

B. All culvert outlets shall include erosion and scour protection measures that protect the embankment as well as the receiving channel.
    1. If the discharge velocity at the end of the pipe is consistent with the normal depth velocity in the receiving channel, then a short riprap apron is adequate to prevent scour at the pipe end that could undermine the headwall or pipe end treatment.
    2. For discharge velocities up to ten (10) feet per second (fps), a rock riprap apron can be used to provide scour protection. The length and width of the apron shall be designed to transition the discharge back to the normal depth and velocity of flow in the channel.
    3. For discharge velocities in excess of ten (10) fps, grouted or wire tied rock in combination with a riprap apron may be necessary to withstand the calculated forces.
    4. For discharge velocities in excess of fifteen (15) fps, energy dissipation structures shall be required in conjunction with additional apron downstream of the energy dissipater to transition the flows back into the receiving channel.
    5. The maximum velocity in any culvert shall be twenty (20) fps.
    6. Roadways designed for overtopping will require additional slope protection on the downstream side of the roadway, since the roadway acts as a spillway.

3.5.4 Culvert Material & Installation

A. The minimum service life for culverts shall be fifty (50) years for privately maintained facilities and one hundred (100) years for publically maintained facilities.

B. The material selection process for culverts shall also include consideration of factors such as hydraulic efficiency, depth of bury, bedding conditions, soil types, sediment loads, abrasion, and corrosion resistance.
C. Acceptable materials for culverts include:
    1. Reinforced Concrete Pipe (RCP)
    2. Corrugated Metal Pipe (Steel) (CMP)
D. The City will require reinforced concrete pipe for all publically maintained facilities unless there is a compelling technical reason to use a different material. The City does not specifically prohibit any particular pipe material for private easements.
E. Water tight joints are required for all installations where the calculated hydraulic grade line is above the top of pipe at any point along the pipe.

3.6 STREET DRAINAGE

3.6.1 Purpose

When designing streets, the amount of stormwater allowed to flow on the surface of the street is governed by consideration of the need for the road to continue functioning under storm conditions and the safety of all roadway users, including vehicles and pedestrians. When the flow in the street exceeds allowable depth, spread, or velocity criteria, the stormwater shall be intercepted, removed from the roadway into an underground pipe system or roadside ditch, and conveyed to an appropriate, open channel. This section presents the criteria for surface drainage on public and private streets. Publications such as the Federal Highway Administration (FHWA) Urban Drainage Design Manual (HEC-22) present detailed methods for performing calculations related to street drainage.

3.6.2 General Policies

A. Street drainage and roadways shall be designed to maintain the natural overall drainage patterns existing prior to development, whenever possible. Significant cross-basin diversions that could increase flow in downstream receiving watercourses where capacity and erosion would be adversely impacted are not allowed.
B. Street drainage design shall consider the 25-year, 50-year, and 100-year storms.
C. When physical conditions do not allow for a sub-surface storm drain system on new curb and gutter street sections, a paralleling surface drainage system may be permitted through the EDSM, Article 10 process.
D. New inverted crown public streets, are prohibited.
E. Where concentrated flows from adjacent properties enter the road right of way, drainage facilities shall be placed to intercept the runoff at a point outside the street section to prevent those flows from going over sidewalks or curbs, especially in areas where sediment loads are carried.

F. It is acceptable for adjacent properties to sheet drain onto the streets. However, slopes and grading outside the roadway template shall be designed to intercept and reduce the potential for sediments to be deposited on sidewalks and in the streets.

G. In all cases, once stormwater runoff enters the street, it shall be confined to the public right of way (on the surface or underground) until it can be discharged in a controlled manner to the appropriate receiving watercourse or other approved conveyance system.

H. Flow on a local street that has significant depth or velocity approaching an intersection with a collector or arterial shall be captured prior to the intersection. It is unacceptable for the local street flow to "shoot out" onto the major roadway. Minor and bypass flows that can "turn the corner" may be permitted through the EDSM, Article 10 process.

3.6.3 Street & Gutter

A. Design Frequency & Allowable Spread

1. For Local curbed street sections, runoff from the 25-year design storm must be contained between the curbs of the street. The 100-year flow must be contained within the right of way with a maximum depth at the crown of one (1') foot.
2. For Collector and Arterial curbed street sections, at least one (1) twelve (12') foot travel lane in each direction must remain free from flooding for the 25-year design storm. The 100-year flow must be contained within the right of way, with a maximum depth at the crown of six (6") inches.
3. If either of the above two criteria are exceeded, the excess flow must be captured and removed from the street surface. The subsurface system capacity may need to be increased beyond the 25-year discharge to handle the balance of the 100-year event, which cannot be contained within the right of way, such as in a hillside situation.

B. Gutter Flow

1. The term gutter flow may include the portion of flow that spreads out into the travel lane.
2. Valley gutters perpendicular to the flow of traffic on arterial or collector streets are not permitted. Valley gutters may be used at intersections parallel to the major road. In cases where a valley gutter is not permitted or is inadequate, the water must be removed from the street by storm drains or other approved methods.

C. Longitudinal & Transverse Slopes

1. The geometric and cross section requirements for all streets are specified in the Engineering Design Standards Manual (EDSM), Article 7, Transportation – Traffic.
2. In locations where superelevated roadway sections are used, all gutter flow approaching the transition from the normal crown section shall be removed from the street to minimize the amount that sheets across the street.
3. Where longitudinal slopes are relatively steep and surface flow velocities are high, allowable gutter capacities shall be reduced to keep depths and velocities at safe levels for pedestrians.

D. Curb & Gutter Terminations

Adequate erosion protection and conveyance measures are required where the curb and gutter section terminates at transitions to uncurbed streets to prevent undermining of the pavement edge and prevent head-cutting of roadway fill slopes. Such protection will consist of a riprap or concrete spillway that extends to the adjacent roadside ditch or other conveyance.

E. Rural Roads & Roadside Ditches
    1. Roadside ditches or channels for rural, uncurbed street sections shall be designed for the 25-year design storm, with provision for the 100-year storm to be contained within the right of way.
    2. The underlying soil conditions, flow depths and velocities, and maintenance shall be considered in the roadside channel design. Unlined ditches may be acceptable where sedimentation is expected, but are unacceptable where long term erosion is more likely.

3.6.4 Catch Basins

A. Locations
    1. Catch basins shall be placed where depth, spread, and velocity criteria dictate. Bypass flow is permissible on continuous grades.
    2. In addition, basins shall also be located in the following locations, with one hundred (100%) percent capture of the design storm:
        a. Where the road warps or superelevates, to prevent gutter flow from sheeting across the lanes
        b. Immediately upgrade of Arterial intersections
        c. Immediately upgrade of bridges
        d. Behind curbs, shoulders, or sidewalks to drain low areas to prevent ponding

B. Types
    1. Curb opening, grate, and combination catch basin types are all acceptable for use, depending on the location, debris potential, and flow rates.
    2. Combination inlets (on-grade) are preferred on public streets due to the reduced clogging tendency when the curb opening is placed upstream of the grate. Calculation of clogging factors for combination inlets can be waived in areas where the likelihood of significant debris is low.
    3. Curved vane grates are preferred for on-grade locations, but are not allowed for sump locations.
    4. All grates within the street shall be bicycle friendly.
    5. To promote flow capture at catch basins on grade, a two (2") inch gutter depression at the inlet is recommended.
    6. Scuppers are acceptable where a receiving ditch or channel is adjacent, and require a concrete or riprap chute to prevent erosion.

3.7 STORM DRAINS

3.7.1 Purpose

This section presents the criteria for the design of underground storm drain pipe systems that convey street flows once they are intercepted by catch basins. They differ from culverts in that the storm drain system hydraulics are controlled by friction and junction losses whereas culvert hydraulics are controlled predominantly by inlet or outlet conditions.

3.7.2 General Policies

A. Storm drains shall be designed in conjunction with the street drainage criteria. Accordingly, the minimum design frequency for all storm drain systems shall be the 25-year storm. Storm drain capacity may need to be increased to control the 100-year storm per the street criteria.

B. Storm drain system outfall points, shall be constructed with end treatments, energy dissipation, aprons, scour protection, and other erosion control measures in a manner similar to the requirements for culvert outlets.

C. If the outlet is perpendicular to the direction of flow in the receiving channel, erosion of the opposite channel bank must be considered and a channel bank lining of riprap or other appropriate material, will be required.

D. The horizontal placement of storm drains and manholes within roadways shall be in general accordance with the standard roadway cross section templates in the EDSM, Article 7, Transportation – Traffic.

E. Where storm drain systems are placed within easements, the minimum easement width for pipes forty eight (48”) inches in diameter or less shall be twenty (20’) feet. For larger diameter or multiple pipe installations, the easement width shall extend at least eight (8’) feet beyond the outside edges of the pipe(s) on each side.

F. Rubber Gasket Reinforced Concrete Pipe (RGRCP) shall be used for all storm drains within the publically maintained right of way.

G. Acceptable materials for private storm drains include:
    1. Reinforced Concrete Pipe (RCP)
    2. Corrugated Metal Pipe (Steel) (CMP)

3.7.3 Design Criteria

A. The minimum allowable slope for any storm drain shall be one half (0.5%) percent.

B. The minimum velocity for pipes in the system when flowing half full shall be three (3) feet per second (fps).

C. The maximum velocity in any portion of a storm drain system shall not exceed twenty (20) fps.

D. In most cases, storm drain pipes shall be on straight runs with uniform slope between manholes or junctions. Horizontally curved storm drains may be permitted through the EDSM, Article 10 process,

where it would be beneficial to follow a curved street alignment. The radius of curvature shall not be less than the pipe manufacturer's recommendation. Pulled joints are not an acceptable method.

E. Minor vertical bends without manholes are discouraged, but may be used where necessary to resolve conflicts with other utilities.

F. Horizontal bends without manholes are acceptable for deflection angles less than 25 (25°) degrees.

G. The minimum pipe diameter for all laterals shall be eighteen (18") inches, and the minimum diameter for all main lines shall be twenty four (24") inches.

H. Storm drain pipe sizes shall increase in the downstream direction.

I. Water tight joints are required for all installations where the calculated hydraulic grade line is above the top of pipe at any point along the pipe.

3.7.4 Manholes & Junction Structures

A. The primary function of a storm drain manhole is to provide access to the storm drain system for inspection and maintenance. Junction structures are used where multiple flows converge and are outfitted with a manhole. The terms manhole and junction are used somewhat interchangeably.

B. At a minimum, manholes are required for the following locations:

1. At junctions where two (2) or more storm drains converge. (Lateral connections from adjacent catch basins do not require a manhole since maintenance access is available through the inlet
2. At intermediate points along storm drains in accordance with Table 3-2
3. At vertical deflections greater than ten (10°) degrees at a single joint
4. At horizontal alignment changes
5. Changes in pipe size
6. Manholes may also be required by the City Engineer at other locations to facilitate maintenance

TABLE 3-2: MANHOLE SPACING CRITERIA

PIPE DIAMETER (INCHES)	MAXIMUM DISTANCE (FEET)
24”	300
27” – 36”	400
42” & UP	500

C. Manholes at vertical deflections shall be at or as close as practical to the point of deflection, with allowance for manufactured bends. If the manhole is not at the point of deflection, it shall be located immediately upstream of the deflection.

D. Manhole covers should be transversely located within the right of way per COC Standard Details. Every effort shall be made to avoid locating manhole covers within the vehicle wheel path.

E. A pressure manhole shaft and pressure frame and cover is required whenever the hydraulic grade line elevation for the design storm at the manhole is less than twelve (12") inches below the manhole cover.

F. Where the manhole depth is greater than twelve (12’) feet the shaft diameter shall be five (5’) feet and must be designed to withstand soil pressures. If a manhole will extend below the water table, it must also be designed to withstand hydrostatic pressure and/or seepage.
G. Manhole shafts shall be five (5’) feet in diameter for storm drain pipes thirty six (36”) inches in diameter or greater.
H. A positive grade to the outflow pipe within the structure is required. A minimum drop of one tenth (0.10’) foot is required through all storm drain manholes.

3.7.5 Hydraulics

A. The Hydraulic Grade Line (HGL) and Energy Grade Line (EGL) shall be calculated for all systems and laterals.
B. In addition to friction losses, HGL calculations shall include losses at all junctions, manholes, bends, transitions, inlets, and outlets.
C. Pressure flow is acceptable, but the HGL shall not extend above the ground surface at any point, and shall be at least one (1') foot below the opening or grate of a catch basin.
D. When connecting into an existing storm drain system, the existing system shall be analyzed to determine available capacity. Improvements to the existing system may be required.

3.8 STORMWATER DETENTION

3.8.1 Purpose

This section presents the criteria for the design of stormwater detention facilities in the City of Cottonwood.

3.8.2 General Policies

A. Stormwater detention is required for all new subdivisions, commercial and industrial developments, re-development of non-conforming sites and other developments that increase impervious area or identifiably impacts adjoining properties.
B. Detention is not required for a single-family residential structure on a residential lot.
C. The post-development discharge from a development cannot exceed the total pre-development peak at each discharge point for the 2-year, 10-year, 25-year, 50-year and 100-year storms.
D. The same hydrologic methodology shall be used for both pre-development and post-development analyses.
E. Off-site flows shall not be routed through on-site detention.
F. The use of pavement parking lot storage as the primary detention facility is not permitted unless other sites or detention alternatives are not available. Some inundation of parking lots may be permissible for the major storm event.
G. Roof-top storage is not permitted for meeting City of Cottonwood detention requirements.
H. Individual on-lot storage systems within single-family residential developments are not permitted for meeting City of Cottonwood detention requirements.

I. All detention systems shall include an emergency overflow spillway. The design overflow shall accommodate the post development 100-year peak discharge. The emergency spillway shall not be placed on the impoundment berm.

J. The minimum finished floor elevation of any structure adjacent to a detention facility shall be a minimum of one (1') foot above the emergency overflow water surface level for the 100-year storm.

K. Developments which are phased shall prepare a master stormwater detention plan for the entire development. The master stormwater detention plan must either be implemented with the first phase in full, if possible, or detention must stand alone for each phase. Changes to any phase may require an update of the master plan to insure that all phases remain coordinated.

L. Discharges from detention facilities shall be designed to enter established downstream drainage systems, (e.g., drainage channels, natural watercourses, public streets, or storm drain systems) whenever possible.

M. The City of Cottonwood, may accept regional detention basins for operation and maintenance on a case-by-case basis. The City will not accept local on-site detention basins for operation, maintenance, or liability.

N. Maintenance of detention facilities shall be the responsibility of the property owner or the homeowner's association. Final Plats, Covenants, Conditions, Restrictions (CC&R's), and/or Development Plans shall include a statement as to the responsibility for the operation and maintenance of all detention facilities.

O. No part of a private detention basin shall be constructed in a public right of way or public utility easement.

3.8.3 Design Criteria

A. Hydrologic analysis for detention design shall be performed using a detailed method that is capable of routing a hydrograph based on stage-storage-discharge characteristics and multi-frequency outlet structures. Tabular and graphical approximation methods are only acceptable for preliminary work.

B. The following minimum slope and depth criteria are required for multi-use basins and basins that have unrestricted access:

    1. A maximum of two to one (2:1) (horizontal to vertical) for protected side slopes and three to one (3:1) (horizontal to vertical) for unprotected side slopes where depths of ponding are less than three (3') feet.
    2. A maximum of four to one (4:1) (horizontal to vertical) for side slopes where depths of ponding exceed three (3') feet.

C. Security barriers, with maintenance access gates, are required along the top of all basin side slopes steeper than three to one (3:1) (horizontal to vertical) and where water depths exceed three (3') feet.

D. A minimum freeboard of one (1') foot above the 100-year high water elevation is required for all detention facilities. Freeboard may include adjacent parking lot areas.

E. Vegetated embankments shall be less than twenty (20') feet in height and shall have side slopes no steeper than three to one (3:1) (horizontal to vertical). Embankments protected with riprap or other approved erosion control measure shall be no steeper than two to one (2:1) (horizontal to vertical).
F. A geotechnical engineering study and slope stability analysis is required for embankments exceeding ten (10') feet in height or for embankment slopes exceeding those given above.
G. Top width of the embankment shall be a minimum of one half (½) the height of the embankment.
H. All detention facilities shall incorporate provisions for emergency overflow.
I. Riprap aprons or other energy dissipating measures should be used at all inflow points (side slope and basin floor) to reduce velocities and encourage sedimentation.
J. Low flow channels are required on the bottom of basins, which serve as multiuse areas and are recommended on all basins. Low flow channels should be designed with a minimum longitudinal slope of one half (0.5%) percent. Concrete lined low flow channels can be designed with a minimum longitudinal slope of two tenths (0.2%) percent.
K. Outlet structure designs shall take clogging potential into account, especially designs that utilize orifice plates.
L. Outlet pipes projecting from a basin side slope or embankment are not permitted. Outlet points shall be constructed with end treatments, energy dissipation, aprons, scour protection, and other erosion control measures in a manner similar to the requirements for culvert outlets.
M. Where basins outfall near to adjoining private properties, additional measures may be necessary to reduce velocities and allow flows to return to natural conditions, to as great an extent as possible, prior to exiting onto the downstream property.
N. Drainage crossings or culverts shall be provided whenever runoff entering or exiting a basin crosses pedestrian paths or sidewalks.
O. The minimum outlet culvert size for detention facilities is twelve (12") inches. Orifice plates are permitted provided the orifice plate is permanent, tamper-proof, and connects to a twelve (12") inch minimum diameter outlet pipe. Outlet structures incorporating orifice plates shall include a trash rack to minimize clogging.

3.9 EROSION & SEDIMENT CONTROL

3.9.1 Purpose

A. The purpose of this section is to control or eliminate soil erosion and sedimentation within the City of Cottonwood. The City has established standards and specifications for conservation practices and planning activities which minimize soil erosion and sedimentation in order to accomplish all of the following goals:
    1. Protect public health, welfare, and the environment
    2. Enable the City to comply with stormwater pollution prevention provisions of the Arizona Pollutant Discharge Elimination System (AZPDES) Small MS4 General Permit

3. Properly manage and reduce erosion and the discharge of pollutants from construction sites to the City's stormwater system, and in turn, to surface waters and groundwater

B. This section will present general guidelines and requirements for erosion and sediment control or Best Management Practices (BMPs) associated with construction activities as defined in 40 CFR 122.26(b)(14)(x). These requirements are outlined in the City of Cottonwood Stormwater Detention Regulations, Cottonwood Municipal Code, Title 15, in compliance with the AZPDES General Permit for Stormwater Discharges from Small Municipal Separate Storm Sewer Systems (MS4s) to Waters of the United States.

3.9.2 Applicability

Erosion and Sediment Control (ESC) Site Plans and/or Stormwater Pollution Prevention Plans (SWPPPs) are required for construction activities that result in the land disturbance of greater than or equal to one (1) acre, including projects that are less than one (1) acre but are part of a larger common plan or development of sale, that discharge to the MS4.

3.9.3 General Guidelines

A. If the project disturbs one (1) acre or greater or is less than one (1) acre but is part of a common plan of development, the owner or operator must apply for coverage under the AZPDES for Stormwater Discharges Associated with Construction Activities. A copy of the Notice of Intent (NOI) to be bound by the State's general construction permit must be filed with the City during permitting.

B. The permittee shall implement BMPs as described in the ESC Plan or SWPPP and shall periodically conduct site inspections to ensure that BMPs are operating correctly and have not been damaged and/or altered.

C. Sediment control shall be used whenever possible or necessary, to prevent offsite damage or sediment deposition to public streets, ROWs, and stormwater facilities.

D. All disturbed soils shall be permanently stabilized.

E. All temporary and permanent erosion and sediment control practices shall be maintained and repaired as needed to assure continued performance of their intended function.

3.9.4 Design Criteria

A. SWPPPs, BMPs, ESC design methods and facilities shall be in accordance with the Arizona Department of Transportation Erosion and Pollution Control Manual, December 2012 as amended. The SWPPP shall be a separate plan sheet or shall be incorporated into the grading & drainage plans. The SWPPP does not supersede the need for AZPDES or NPDES permits.

B. For specific design criteria and guidelines, see the Cottonwood Municipal Code, Title 15, Stormwater Detention Regulations.

3.10 POST CONSTRUCTION STORMWATER TREATMENT

3.10.1 Purpose

This section will present general guidelines and requirements for post construction stormwater management or Best Management Practices (BMPs) for new development and redevelopment projects to prevent or minimize water quality impacts. These requirements are outlined in the Cottonwood Municipal Code, Title 15, Stormwater Detention Regulations in compliance with the Arizona Pollutant Discharge Elimination System (AZPDES) General Permit for Stormwater Discharges from Small Municipal Separate Storm Sewer Systems (MS4s) to Waters of the United States.

3.10.2 Applicability

New development or redevelopment projects that disturb greater than or equal to one (1) acre, including projects that are less than one (1) acre but are part of a larger common plan or development of sale, that discharge to the MS4 must treat the "first flush" (defined as the first half inch) runoff from a site.

3.10.3 Guidelines

A. The following categories of structural treatment practices for post-construction stormwater runoff are approved for use within the City of Cottonwood.

   1. Inlet Filtration Systems

      Inlet filtration systems are accepted for use on project sites with underground storm infrastructure. Inlet filters must be sized and located appropriately to treat the required WQV for the site. Filter systems shall provide removal of sediments, debris and other nonpoint source pollutants from the site. For sites with a high degree of impervious surface (i.e., parking lots), filters shall provide for the removal of petrochemicals and hydrocarbons.

   2. Underground Separators

      Underground separators, such as oil-water separators or sand-oil separators, are accepted for use on project sites with underground storm infrastructure. Underground separators may be required for land uses or activities with higher potential pollutant loadings, known as "hotspots," or for sites that discharge directly to a waterway.

   3. Surface Treatment/Bio filtration

      For developments with surface flows, stormwater may be collected and treated in engineered vegetated basins on site. Traditional detention basin designs may be modified to allow for a longer holding time in the basin and include the installation of a sand/soil filter bed and underlying gravel storage zone. For design specifications, reference the City of Flagstaff Low Impact Development Guidance Manual for Site Design and Implementation, Section 3.8 Extended Detention Basin.

3.10.4 Operations & Maintenance

A. The owner of permanent stormwater management facilities shall be responsible for the proper operation and maintenance of those facilities during and after construction. All permanent on-site

BMPs shall be operational prior to the use by any development or phase of development dependent on those BMPs. An Operation and Maintenance Plan shall be prepared for review and approval by the City Engineer and shall be executed and signed by the Department and the owner.

B. Development project permits shall be conditioned to require the property owner to execute a Standard Operation and Maintenance Agreement for Post Construction Stormwater Quality Best Management Practices (BMPs) Facilities prior to the issuance of any construction permits.

C. The City of Cottonwood does not endorse specific commercial brands or products, but may provide examples of brands or products currently used in the City to meet Code requirements.

[Page Intentionally Left Blank]

ARTICLE 4: WATER

4.1 INTRODUCTION

4.1.1 Purpose

The goal of the Water System Planning and Design Article is to provide technical management, comprehensive planning, and sound engineering to expand and maintain a reliable and safe water supply, distribution, and storage system. Engineering standards, guidelines, and geometric requirements for the design and construction of public water improvements within the City of Cottonwood will result in high-quality customer service and fire protection capabilities.

4.1.2 Applicability

A. The standards and guidelines of this Article shall apply to the construction, modification and extension of all water distribution mains, pump stations and other appurtenances as well as any modification of the public water system to be owned, operated and maintained, by the City of Cottonwood (COC). Privately funded water mains, proposed to be, connected to the City of Cottonwood's system are reviewed for compliance, with City of Cottonwood standards. Private water mains shall be extended to new users in a logical and cost effective manner without adversely affecting existing customers and system performance. This Article is intended for use in plan design, preparation, and review process.

B. Developers are required to install all improvements necessary, including off-site improvements to provide water service for domestic and firefighting purposes to their development in accordance with, City Code, this Article and the most current water and wastewater model study.

4.1.3 Design Standards & Guidelines

A. New public and private water supply distribution and storage facilities shall be designed in accordance with Article 1.

B. A civil engineer registered in the State of Arizona shall analyze, design and seal all proposed water system project plans and specifications that are determined by the City Engineer to have an impact on the water distribution system. The effects of peak and fire flow demands shall be examined to ensure proper sizing and layout of proposed water system facilities, including impacts to existing offsite facilities where deemed appropriate by the City Engineer.

C. The operation, maintenance and repair of private water systems are the responsibility of the Water Service Provider (Provider). The Provider shall pay the cost for the operation, maintenance, repair and replacement, of private systems. These private systems are connected to main lines operated by the City of Cottonwood, as identified on the final approved plans. The City of Cottonwood shall have no obligation or requirement to assist or provide labor or equipment to perform or supplement any responsibilities pertaining to said private water systems, all of which are those of the Provider. The Provider shall provide on a yearly basis the firm, contact name, business phone number and emergency phone number for the private system operator, who shall be certified by the Arizona Department of Environmental Quality at the required level.

D. All components and related appurtenances for construction and repair of water infrastructure shall be domestically manufactured, certified and submitted to the City for review and approval prior to installation.

4.1.4 State Regulations

A. Arizona Department of Water Resources (ADWR)
ADWR regulations are contained within A.R.S. § 45 and they encompass requirements for water supplies and the management thereof. All new water connections made to the City's system require the confirmation that the supply exists and that there is entitlement to it.

B. Arizona Department of Environmental Quality (ADEQ)
ADEQ's Engineering Manual Bulletin No. 8 "Disinfection of Water Systems" and No. 10, "Guidelines for the Construction of Water Systems" and the Arizona Administrative Code, "Title 18-5-505.B - Approval to Construct", contain specific requirements for submittals, approvals, and notifications when extension of a public water main is proposed. The developer and the Engineer of Record are expected to be aware of and comply with the above referenced regulations. Additional information can be found on the ADEQ website at www.azdeq.gov/

1. Before civil infrastructure construction permits are issued, the developer shall submit to the City Engineer an Approval to Construct (ATC) from ADEQ or the local delegated authority.
2. Prior to the City Engineer issuing an Approval to Operate (ATO) and release from the City of Cottonwood, the developer shall deliver to the City a signed Approval of Construction (AOC) from ADEQ or the local delegated authority

C. Yavapai County Environmental Services Department (YCESD)

1. Before civil infrastructure construction, permits are issued, the developer shall submit to the City Engineer an Approval to Construct (ATC) from ADEQ through the YCESD delegation.
2. Prior to the City Engineer issuing an Approval to Operate (ATO) and release from the City of Cottonwood, the developer shall deliver to the City a signed Approval of Construction (AOC) from ADEQ through the YCESD delegation.

D. City of Cottonwood (COC)

1. Issuance of an Approval to Construct by YCESD or ADEQ does not constitute an approval of plans and reports by the City of Cottonwood. No construction shall commence prior to the City of Cottonwood City Engineer issuing a permit.
2. An as-built plan submittal is required prior to receiving an "Approval to Operate and Release" from the City of Cottonwood.

4.2 GENERAL INFORMATION

The City of Cottonwood holds a Designation of Adequate Water Supply No. 41-700578.0001 issued by the Director of ADWR, dated March 10, 2017. The City's water service area is located within the City Limits.

4.3 PLAN SUBMITTAL REQUIREMENTS

Improvement plans submitted to the City of Cottonwood for approval shall adhere to professional engineering standards governed by the State of Arizona Board of Technical Registration. Improvement plans shall be complete and shall comply with City of Cottonwood and State Board requirements. Improvement plans that do not meet industry standards, or are incomplete, shall be returned by the City of Cottonwood without review comments and shall be determined to be an incomplete project submittal. Repetitive submittals of non-compliant and incomplete improvement documents may be subject to State of Arizona Board of Technical Registration review.

4.4 WATER SYSTEM REPORTS

4.4.1 General Information

A. All projects shall be required to submit a Water Master Plan Report and/or a Water System Design Report. The purpose of these reports is to provide the City of Cottonwood with information regarding the potential water demands of the project and verify the capability of the City of Cottonwood to provide the domestic water use and fire flow demands that will be required.

B. All Water System Reports shall be prepared under the direction of a licensed civil engineer in the State of Arizona. The report shall be sealed and signed by the Engineer of Record in accordance with the requirements of the State of Arizona Board of Technical Registration, and submitted to the City Engineer.

C. Reports shall provide an analysis of the impact that a development will have on the City of Cottonwood's water system. The objectives of the Water Reports are to verify the water demand, the system's ability to supply and maintain sufficient fire flows, and the available system flows, pressures, and proposed hydraulic regimes. All reports submitted to the City of Cottonwood for review shall be prepared in accordance with the following guidelines:

1. Format:
    a. The report shall be on letter sized paper (8 ½" x 11")
    b. All reports shall have a table of contents, including page numbers
    c. Maps and other supporting materials larger than folded ledger size paper (11" x 17") shall be placed into sleeves as an appendix to the report
    d. A civil engineer licensed to practice in the State of Arizona shall seal each report
    e. The project name shall be located on the cover
    f. The name, address, and phone number of the developer/owner and Engineer of Record shall be stated on the cover
    g. The original submittal date and all subsequent revision dates shall be located on the cover
    h. Common spreadsheet formats shall be compatible with MS Excel
2. Existing Conditions:

a. Reference any existing master plans or design reports applicable to adjacent development
b. Include excerpts from existing plans or reports as applicable
c. Indicate the dates, times and results of certified flow testing of the existing water system
d. Include a description based on all parts or reference within a platted development
e. Describe the existing topography, and landform features
f. Include the location and description of existing utilities in the vicinity
g. Describe the existing and proposed site zoning and land uses
h. Include reference to elements of the City of Cottonwood's General Plan and identify any designated character area or studies that will affect the project's design

3. Proposed Conditions:
    a. Summarize the proposed development. Include a site plan that indicates the layout of the proposed development with a survey a minimum of one hundred (100') feet beyond the project limits or as determined by the City Engineer
    b. Identify the location and size of all proposed connection(s) to the City of Cottonwood's water system
        i. Show all looping and/or extension of water mains into the site
        ii. Indicate the location of all pressure zone boundary lines
    c. Provide a looped system for all water supply demands needed to meet the minimum requirements of the Fire Department, maintain water quality standards, and maintain system redundancy for operational flexibility
    d. Reference which water zone the site is within and address all required fire flows and system pressures
    e. Address any maintenance responsibilities of the proposed water system
4. Mapping:
    a. All mapping shall conform to City of Cottonwood CADD standards and the EDSM, Article 9, Survey Controls
    b. The project name shall be located on each sheet
    c. The name, address, and phone number of the developer/owner and Engineer of Record shall be stated on each sheet
    d. The original submittal date and all subsequent revision dates shall be located on the exhibits
    e. All maps shall be prepared to an appropriate scale that is legible
    f. All proposed or existing on-site and off-site facilities including, but not limited to, pump stations, transmission and distribution mains, and reservoirs
    g. All proposed or existing street locations, parcel boundaries, and proposed lots within each parcel
    h. Label contour lines at two (2') foot intervals

i. Indicate pressure zone boundaries, pressure-reducing valves (PRV'S), and corresponding zone valves
j. Include size and pressure settings for all pressure reducing valves (PRV).
k. Include a vicinity map showing existing and proposed streets to a distance of one (1) mile from the exterior boundaries of the project

4.4.2 Water Master Plan Report Content

A. When phasing is contemplated or when required by the City Engineer, a Water Master Plan Report shall be prepared in accordance with the requirements of the Engineering Design Standards Manual (EDSM), Section 4.4. The report shall also address, but not be limited to the following:
    1. The report shall specify the terms and requirements for water service to the development, including any off-site improvements
    2. All development project owners shall be responsible for determining their specific water system needs between interim and buildout
        a. Include the projections for future surrounding developments based on the adopted General Plan Land Use Map to ensure there is no adverse impact on the system
    3. A computer water network model, which is compliant with the EDSM, Section 4.4.4 shall be used for the analysis of pressure and flow within the distribution system, verifying that adequate pressures, domestic and fire flows will be available within the proposed development based on projected demands and shall include the following:
        a. If certified flow tests performed on the system during peak demand to which the project is to be connected do not show that sufficient capacity exists, the computer model will be used to determine the required on-site and off-site facilities, such as pump stations and pipelines, necessary to serve the project
        b. If the proposed development requires a change in zoning that increases density or proposes a water system different from the City of Cottonwood's Water Master Plan, then additional upstream and downstream, off-site analysis will be required
        c. Modification of existing or creation of new pressure zones shall require approval of the City Engineer
    4. Master plan mapping shall demonstrate the following:
        a. Demonstrate compliance with the City of Cottonwood's Water Model, which encompasses the respective area
        b. Master planned developments that design a distribution system that will be phased shall provide a synopsis of the phasing with modeling backup to the Public Works Department prior to acceptance of the developments Water Master Plan
        c. Each phase of the master plan must be a standalone document when submitted to the City of Cottonwood for review of that specific phase

4.4.3 Water Design Report Content

A. A Water Design Report shall be prepared in accordance with the requirements of the Engineering Design Standards Manual (EDSM), Section 4.4.1.

B. The system design shall comply with the Arizona Department of Environmental Quality (ADEQ), Engineering Manual Bulletin No. 10 and the Arizona Administrative Code R18-5 requirements for system performance and redundancy. The developer shall coordinate water system improvements with the City of Cottonwood water model and the Capital Improvement Plan.

C. In addition to the general requirements in the EDSM, Section 4.3.1 and 4.4.1, the Water Design Report shall at a minimum, include the following:

1. Design Documentation
    a. Note the design compliance with the latest revision of this manual and all other applicable design standards and codes
    b. Include a narrative of which design procedures, policies and methodologies will be incorporated into the design engineering of the water system
    c. List the title and version of any software used in the design analysis
2. A summary of the anticipated water demands for the project
    a. The priority of obtaining water design flows for a non-residential facility is, 1) flow measurements from the actual facility; 2) the use of flows from similar facilities in the immediate area; 3) the use of similar flows from similar facilities in other areas; and 4) flow tables as listed in the EDSM, Article 4, Table 4-1
    b. Flows may be calculated on a sub-area basis, however, total flows for the entire development shall also be provided
    c. Flow rates shall include average day, maximum day, peak hour flows and fire flow demands
    d. Include fire flows and fire sprinkler system demands that will be required for the development in accordance with the adopted Fire Code, City of Cottonwood Amendments and site-specific criteria as may be established by the City of Cottonwood Fire Marshall
3. All projects shall be required to provide a fire analysis that shall demonstrate that there are adequate fire flows available from the City of Cottonwood's existing system to meet the required fire demands of the proposed development, considering the building construction type, height, layout, etc.
    a. The Engineer of Record shall use a hydraulic model to evaluate the ability of the water distribution system to deliver fire flows to the development
    b. The developer is responsible for understanding the fire flow requirements of the structures that are to be built and shall assure that the water distribution system within the development is capable of delivering the required fire flows

c. Improvements, including off-site improvements may be required to meet these criteria
d. The fire flow demands shall be included in the overall water demand and summarized in the water design report

4. Site Specific Analysis
    a. The fire flow demand shall comply with the International Fire Code (IFC) and the National Fire Protection Association (NFPA), Standard 13, 13R and 13D, Installation of Sprinkler Systems as adopted by the City of Cottonwood and the Board of Technical Registration Substantive Policy Statement for fire sprinkler systems. The report shall list the applicable codes and standards and the appropriate engineering practices
    b. The "fire flow demand" section shall provide the following information:
        i. Engineer of Records name, company, address, City, State, zip code, and phone number
        ii. Project name, limits, and address, general location & proposed uses
        iii. Detail physical aspects of the proposed on-site structures including:
            1. Building height (feet)
            2. Number of stories above finished grade
            3. International Building Code (IBC) construction type
            4. Building area (square feet)
        iv. The "fire flow" design report shall provide:
            1. Revised International Fire Code (IFC) and most recent City of Cottonwood Amendments for required fire flow
            2. Percentage of reduction allowed for the installation of a fire sprinkler system and resultant system demand as approved by the Fire Marshal
        v. Projects that install fire sprinkler systems shall be in accordance with the Arizona Board of Technical Registration Substantive Policy Statement regarding fire sprinkler systems. The following information shall be included:
            1. Range of the fire hazards of the project
            2. The hazard classification of the intended occupancy, including any special hazards
            3. The appropriate engineering practices
            4. The availability and adequacy of the water supply
            5. Based on a hazard analysis for the proposed use of each building (including special hazards), the appropriate fire sprinkler design density and area of operation shall be provided for each hazard area
            6. Anticipated fire sprinkler demand (psi and gpm)

7. Required fire flow and anticipated fire sprinkler demand shall be provided for the project in accordance with the IFC and most current City of Cottonwood Amendments

c. In order to ascertain the availability and adequacy of the water supply for the project, the report shall provide field fire hydrant flow and pressure test results performed in accordance with AWWA M-17 based on a certified test of the existing water system within the previous sixty (60) days. A flow test shall be witnessed by the design engineer and valves operated by City of Cottonwood Water Division by calling 928.634.0186. The flow test information shall include:

i. Test date
ii. Test time
iii. Test locations
iv. Test and residual hydrants
v. Orifice size
vi. Orifice coefficient
vii. Flow test data:
    1. Static pressure (psi)
    2. Residual pressure (psi)
    3. Pitot measurement (psi)
    4. Recorded flow rate (gpm)
    5. Flow rate (gpm) converted to twenty (20) (psi)
viii. Testing technician
ix. A copy of the written City of Cottonwood Water Division or Fire Department report showing the flow test was witnessed by City personnel

4.4.4 Water Modelling

A. Water System Model Analysis

1. The Engineer of Record shall provide a model of the planned Water System Master Plan Report or Water System Design Report as delineated in the EDSM, Sections 4.4.1 and 4.4.2. This modeling shall be required where new public water mains are being added, modified or extended in the City of Cottonwood system. The model shall provide the data necessary to validate that water demands are met to support the project. A water model is also required to demonstrate the required fire flow is adequate in accordance with the adopted Fire Code and City of Cottonwood Amendments.
2. Infill projects may not require a model. Infill projects include single lot development where fire and domestic flows are taken directly from existing City of Cottonwood mains and where the zoning is in conformance with the City of Cottonwood General Plan. If a model is not required, include narrative of the proposed connections to the City of Cottonwood.

B. When water hydraulic modeling information is needed, the following requirements shall be met to deliver model data to the City of Cottonwood.

1. Model Software

   The City of Cottonwood currently uses the Bentley WaterCAD software. The modeling software used to evaluate a proposed development does not need to be the same software, but the data shall be provided to the City of Cottonwood in either WaterCAD or EPA-NET 2.0 format.

2. Model Development

   The developer or developer's engineer shall create and utilize a hydraulic model to demonstrate that the proposed infrastructure size, hydraulics, etc. are adequate and satisfy the City of Cottonwood's requirements for domestic and fire flow demands. The City of Cottonwood may provide specific boundary conditions upon request. The model information shall be delivered to the City of Cottonwood to be added to the City of Cottonwood's model, where modeling evaluations may be performed to verify that the proposed infrastructure and demands will not negatively affect the existing COC system. Proposed water systems shall evaluate the City of Cottonwood's overall water supply, pumping, and storage requirements.

C. Hydraulic Model Data

1. All drawings and model data shall use the City of Cottonwood coordinate system and datum in the EDSM, Article 9.
2. Model data shall be free of Topology errors in accordance with commonly accepted engineering practices prior to submission to the City of Cottonwood.
3. Water Distribution System Attributes:
   a. Mains – Diameter, length, material, location, connectivity with other entities
   b. Reservoirs – Base elevation, height, volume, location, connectivity with other entities
   c. Pump Stations – Layout, number of pumps, pump curve or design point, elevation, location, connectivity with other entities, pump control scheme
   d. Nodes (Connection Points) – Location, elevation, demand
   e. Pressure Reducing Valves and Tank Fill Valves – Location, connectivity with other entities, elevation, number of valves, diameter and valve set points
   f. Wells – Location, connectivity, design flow, control scheme
   g. Polygons - Pressure zone boundaries, zoning/density
4. All model data shall include the following:
   a. Demands shall be calculated per EDSM Section 4.4.3.C using average day water demands in gallons per day
   b. The system shall be capable of providing maximum day demand plus required fire flow
   c. Verification of the ability of the proposed system to provide adequate flow and pressures under the various demand combinations shall be provided

d. Verification that the minimum required pressure throughout the water distribution system is achieved at the highest finished floor elevation or service point in the fire sprinkler line. If the minimum residual pressure under fire flow conditions cannot be achieved, additional private improvements may be required
e. Pipes and nodes – Include item identification, demands, elevation, hydraulic grades, length, status, diameter, velocity, head loss/1000 ft
f. Reservoirs and pumps – Provide identification, diameter, height, elevation, upstream and downstream hydraulic grade, number of pumps, pump capacity and proposed pump curves
g. Pressure Reducing Valves (PRV's) – Provide identification, size, elevation, upstream and downstream hydraulic grade settings

5. Hydraulic Evaluation
    a. New developments that do not constitute infill shall be modeled to determine if the infrastructure is adequate to serve the development and provide the level of service as defined by the City of Cottonwood's performance criteria.
    b. The City will use the City of Cottonwood's water model to verify the ability of the existing water distribution system to deliver adequate water to the proposed development per the design Engineer's proposal. Supplemental fire hydrant tests shall also be used to make this determination. The developer is responsible to make certain that all fire flow requirements (hydrants and/or sprinklers) within the development satisfies the City of Cottonwood Engineering Design Standards Manual and adopted Fire Code requirements.
    c. The following scenarios shall be modeled:
        i. Average Day Demands
        ii. Maximum Day Demands
        iii. Peak Hour Demands
        iv. Fire Flow Demands (Which are defined as, the maximum daily demand plus the appropriate fire flow demand)
    d. Model simulations shall be documented in a graphical and tabular format to demonstrate that the water distribution system shall provide the required flow at suitable pressures and water main velocities.
    e. Fire flow modeling results will be documented as follows:
        i. Junction Report
            1. Static Pressures
            2. Residual Pressures
            3. Demands
            4. Calculated Minimum Pressure
            5. Elevation
            6. Pressure Head

7. Hydraulic grade

ii. Pipe Report

1. Length
2. Type
3. Diameter
4. Velocities
5. C-Factor
6. Control Status
7. Discharge
8. Head Loss
9. Head Loss Gradient

f. Boundary conditions that represent the interface between the development and the rest of the distribution system, shall be explained clearly.

TABLE 4-1: UNIT DESIGN FLOWS FOR WATER

TYPE OF FACILITY SERVED	APPLICABLE UNIT	WATER DESIGN FLOW PER APPLICABLE UNIT GALLONS PER DAY (GPD)
Airport	Passenger (avg daily number)	5
	Employee	18
Auto Wash	Facility	per Mfg
Bar/Lounge	Seat	36
Barber Shop	Chair	42
Beauty Parlor	Chair	120
Bowling Alley (Snack Bar Only)	Lane	90
Camp		
- Day (No cooking facilities)	Camping Unit	36
- Campground, Overnight,	Camping Unit	90
- Flush Toilets		
- Campground, Overnight,	Camping Unit	180
- Flush Toilets & Shower		
- Campground – Luxury	Person	120 – 180
- Youth (Summer or Seasonal)	Person	60
Church		
- with Kitchen	Person (max attendance)	8
- without Kitchen	Person (max attendance)	7
Country Club	Resident Member	120
	Non-Resident Member	12
Dance Hall	Patron	6
Dental Office	Chair	600
Dog Kennel	Animal (max occupancy)	18
Dwellings	Person	96
Fire Station	Employee	54
Hospital		
- All Flows	Bed	300
- Kitchen Waste Only	Bed	30
- Laundry Waste Only	Bed	48

Hotel/Motel		
- with Kitchen	Bed (2 person)	72
- without Kitchen	Bed (2 person)	60
Industrial Facility		
- with Shower	Employee	42
- without Shower	Employee	30
- Cafeteria (add)	Employee	6
Institutions		
- Resident	Person	90
- Nursing Home	Person	150
- Rest Home	Person	150
Laundry		
- Self Service	Wash Cycle	60
- Commercial	Washing Machine	per Mfg
Office Building	Employee	24
Park (temporary use)		
- Picnic, with Flush Toilets Only	Parking Space	24
- Picnic, with Showers & Flush Toilets	Parking Space	48
- RV – no water or sewer connections	Vehicle Space	90
- RV – with water & sewer connections	Vehicle Space	120
- Mobile Home/Trailer	Space	300
Restaurant/Cafeteria	Employee	24
- With toilet (add)	Customer	8
- Kitchen Waste (add)	Meal	7
- Garbage Disposal (add)	Meal	1
- Cocktail Lounge (add)	Customer	2
- Kitchen Waste Disposal Service (add)	Meal	2
- Restroom, Public	Toilet	240
School		
- Staff & Office	Person	24
- Elementary (add)	Student	18
- Middle & High (add)	Student	24
- with Gym & Showers (add)	Student	6
- with Cafeteria (add)	Student	4
- Boarding, total flow	Person	120
Service Station with Toilets	First Bay	1200
	Each Additional Bay	600
Shopping Center, No Food or Laundry	Square Foot of Retail Space	0.1
Store	Employee	24
Public Restroom (add)	Square Foot of Retail Space	0.1
Swimming Pool, Public	Person	12
Theater		
- Drive-in	Vehicle Space	12
- Indoor	Seat	6

4.5 WATER SYSTEM DEMAND

4.5.1 System Demand

The water system demand describes the standards against which the water infrastructure is measured to determine the criteria of the proposed infrastructure. This water system demand criteria is based on the Arizona Administrative Code (AAC) and other applicable regulatory standards.

4.5.2 Infrastructure Sizing

Infrastructure shall be sized to supply the maximum day demand plus fire flow. This will be determined by using the average daily demands listed in Table 4-1 and adding a maximum day peaking factor of 1.7. Fire flows shall be determined by the most currently adopted International Fire Code and identified by the City Fire Marshall. Table 4-1 lists water usage in categories that are correlated to sewage collection Unit Design flows as shown in the (AAC).

4.6 PLANNING

4.6.1 Comprehensive Planning

A. The City of Cottonwood has developed a Water System Model to ensure that future improvement requirements are achieved through an orderly development of the City of Cottonwood planning areas. Any engineer working on the design of public or private water infrastructure shall develop plans consistent with the appropriate sections of the City of Cottonwood's Model.
B. Water mains shall be installed along the entire length of the property line frontage of the property being developed. The property line frontage is defined as that portion of a parcel of property that abuts a street, easement, or public rights of way. If a parcel to be developed has more than one frontage, improvements may be required to be installed along all frontages.

4.6.2 Water Facilities

A. Water facilities (wells, reservoirs, booster pump stations, etc.) are designed and constructed by the City of Cottonwood through its capital improvement program. Developers needing to construct water facilities shall contact the Public Works Department and request a meeting to coordinate the design of these facilities. The developer shall be prepared to address how the proposed system will conform to the City of Cottonwood's Water Master Plan. The City of Cottonwood will address design issues and the review process for these facilities.
B. Unless otherwise agreed to in writing by the City Engineer, water facilities shall be located on a tract or lot dedicated to the City of Cottonwood (conveyed by a general warranty deed) and accompanied by a title policy in favor of the City of Cottonwood.
C. Wells
    1. ADWR issues the authority to drill groundwater wells both exempt and non-exempt. Before drilling a well, a Notice of Intent to Drill shall be filed with ADWR and a "drill card" must be obtained from ADWR. Non-exempt wells require greater ADWR review and public noticing.

Post drilling, and well and pump installation, required well logs and pump completion report must be filed with ADWR.

2. In the event a property has an existing exempt well, and the use continues while a connection is made to the City's potable water system, a backflow prevention device is require by Cottonwood City Code, Section 3-6-2 (International Plumbing Code, Amendments).
3. A property owner currently using an exempt well that seeks to discontinue its use for which the City is able to provide water supplies, then the well owner shall complete ADWR well abandoned requirements. Water service to the property will require a water service agreement to document the volume to be served and conditions of the service. Refer to the adopted City of Cottonwood Water Management Policy, as extended.
4. Refer to EDSM, Section 4.7.1 for information regarding the drilling of new exempt wells.

D. Reservoirs

Storage facilities shall provide operational storage for peak demands above maximum daily demands, emergency storage for power outages and line breaks, fire protection storage. Facilities shall be designed to maximize the efficient use of water production wells and pumping facilities. Therefore, storage in each designated service area shall exceed the volume of the sum of 1, 2 and 3 below or one average day demand, whichever is greater.

1. Operational storage equaling twenty (20%) percent of maximum daily demand
2. Fire storage as determined by the fire department ranges from four (4) to ten (10) hours for multiple fire occurrences within a pressure zone. Fire demand rates and storage volumes are determined using criteria established by the American Insurance Association according to the following equation:

$$Q = 1{,}020\sqrt{P}(1 - 0.01\sqrt{P})$$

P = Population of the Area (in thousands)

Q = Gallons per Minute

3. Emergency storage equaling ten (10%) percent of maximum daily demand
4. The City Engineer shall determine final sizing and dimensions.

E. Booster Pump Stations

1. Booster pumps shall be designed to maintain adequate pressure for domestic and fire protection water supply. All stations shall provide at a minimum; variable frequency drives, backup power supply, separate electrical room and SCADA compatible with the City of Cottonwood's current system. Designers shall refer to Engineering Bulletin No. 10, Arizona Department of Environmental Quality, for additional design criteria. The City Engineer shall determine final sizing, number of pumps, pump capacity, supervisory control and data acquisition (SCADA) requirements, and building dimensions.
2. A preliminary design report shall be prepared and submitted to the City Engineer for review by the Utilities Department prior to submittal of final plans for review. This report shall outline the type of equipment and controls proposed, Piping and Instrumentation Diagram (PI&D), and SCADA for the station along with the proposed hydraulics. A final design report prepared

by a registered civil engineer licensed in the State of Arizona shall accompany the construction drawings and specifications.

4.7 TRANSMISSION & DISTRIBUTION SYSTEMS

4.7.1 General Information

A. Effective January 1, 2006 A.R.S 45§ 45-454 (C) prohibits the drilling of an exempt well (max. pump capacity of not more than 35 gpm and that is used only for non-irrigation purposes) on land if any part of the land is within 100 feet of an operating distribution system with a Decision and Order of AWS. For additional detail, see the statute referenced and ADWR Substantive Policy Statement GW43.

B. The City of Cottonwood requires water mains to be installed along the entire length of the property line frontage of that property being developed. The property line frontage is defined as, that portion of a parcel of property that abuts a street, easement, or public rights of way. If a parcel to be developed has more than one frontage, improvements may be required to be installed along all frontages if required flow, system redundancy, water quality or paving issues conflict.

C. Design Policy

1. The City of Cottonwood will require the extension of water mains along a frontage, or through a subdivided parcel, to the boundary where future extension of the water main is possible, providing a point of service to adjacent properties, or as determined necessary by the City Engineer. Reconstruction of residential or commercial structures requires compliance with all current ordinances and design guidelines relating to water main extensions, main sizing, and service lines.
2. Each lot shall have safe, reliable, and potable water in sufficient volume and pressure for domestic use and fire protection. The Engineer of Record shall verify this by performing a flow and pressure test during peak demand period, of that part of the potable system to be extended or connected onto. The flows and pressure shall meet minimum requirements for domestic and fire flow per applicable regulatory standards. The Engineer of Record shall place a statement verifying this within the design report along with copies of the tests.
3. The City of Cottonwood maintains over twenty (20) pressure zones and care shall be taken to identify boundary conditions when designing near a zone line. The Engineer of Record shall contact the Utilities Department for verification of water pressure zone boundaries. Static and dynamic water pressure and flow tests will be performed on fire hydrants located on each leg of the existing water system between zone boundaries where connections are proposed.

D. Design Standards

1. The Engineer of Record shall design proposed water infrastructure in accordance with the design standards listed in the EDSM. These documents contain construction related specifications and details that impact the design of water systems including trenching, bedding, backfill and pavement replacement, etc.

2. Water system expansion and extension requirements to serve both new and existing development are outlined in the City of Cottonwood Code, Title 14 – City Utilities.

4.7.2 Water Main Pipes & Materials

A. Pipe Sizing

1. The minimum size of a water main for providing fire protection and serving fire hydrants shall be six (6”) inches in diameter when service is provided from two (2) directions, or where the maximum length of six (6”) inch pipe serving the hydrant from one (1) direction does not exceed two hundred fifty (250’) feet. A minimum eight (8”) inch water main shall be required where service is provided from one (1) direction only. Larger size mains shall be provided as necessary to meet all other design criteria, the development’s design report, specific water demands, or the City of Cottonwood Water System Master Plan.
2. Refer to the adopted Fire Code and City of Cottonwood Amendments for the maximum length of dead end fire lines that may be used for fire protection. Fire lines shall be calculated from the street tap to the building for determining sprinkler design.
3. One (1”) inch, two (2”) inch or three (3”) inch water mains are not permitted for new construction as public water mains. Four (4”) inch mains may be considered with approval from the City Engineer.

B. Pipe Materials

1. The use of asbestos cement is prohibited in the City of Cottonwood Water system.
2. All water mains shall be a minimum of Class DR 14 Polyvinyl Chloride (PVC) or 350 (CL350) Ductile Iron Pipe (DIP) cement mortar lined and seal coated.
3. Service connections for meters shall be one (1”) inch minimum, CTS Polyethylene Water Tubing without splices.
4. Remote Fire Department connection piping shall be CL350 DIP. Below the vertical section at the street, an approved drip valve shall be installed over a bed of gravel per COC Standard Detail 1360. The line shall include tracer wire per COC Standard Detail 1319-1.
5. Fire line services three (3”) inches and smaller shall be connected to the main with a minimum four (4”) inch DIP, CL350 with a resilient seat valve. The DIP pipe shall be extended beyond the resilient seat valve to the property or easement boundary.
6. Design analysis for wall thickness shall be required in cases where pipelines could be subjected to external loads, which exceed the manufacturer’s specifications. These include, but are not limited to, pipelines crossing under storm drain lines greater than thirty six (36”) inches in diameter, pipelines in the roadway alignment that would be exposed to construction vehicle loads prior to paving, and installations exceeding the pipe manufacturer’s maximum depth of bury.
7. All aggregate material within the trench envelope of water mains and/or fire lines require ph and resistivity testing for determination of the necessity of cathodic protection/polywrap. Aggregate shall be tested in accordance with procedures of the American Ductile Iron Pipe

Research Association. Such tests shall be submitted to the City Engineer prior to construction to determine if cathodic protection/polywrap is required in the design.

4.7.3 System Layout

A. To provide appropriate water pressure, water circulation and redundancy, all new water mains shall be designed in a looped configuration where feasible, as determined by the City Engineer, providing a minimum of two sources that can be isolated by a gate valves, for maximum dead-end line length and size requirements.

B. Water mains shall not be located within ten (10') feet of a building or retaining wall.

C. For purposes of horizontal and vertical separation, storm drains, non-potable and reclaimed water systems and sewer service lines shall be treated as sewer mains. A minimum of one (1') foot of separation shall be required pursuant to MAG Standard Details 404-1 and 404-2.

D. Existing water main stubs and service lines adjacent to a proposed development that are not used shall be removed. For mains, this includes removing all valves, capping the tee and removing the pipe at the main. For services, this includes removing the saddle and its appurtenances and installing a full circle stainless steel clamp.

E. Main Locations:

1. Public water mains and appurtenances are required to be located within dedicated public right of way or easements
2. Horizontal Location: All water mains shall be aligned parallel to property lines or street center lines and shall not cross and re-cross the centerline
    a. Water mains located beneath streets within the public right of way shall refer to COC Standard Details 1601 thru 1604
    b. Public water mains in commercial, multifamily, and industrial developments shall be located under driveways, or drive aisles and a minimum of ten (10') feet from any structure, including overhangs
    c. A minimum twenty (20') foot easement shall be provided and the water main shall be located in the center of the water main easement
    d. Horizontal alignment changes shall be made with 11 ¼, 22 ½, 45, 90 degree bends. Joint deflection shall not exceed seventy five (75%) percent of the pipe manufactures specification
    e. Horizontal and Vertical locations shall be consistent with COC Standard Details 1601 thru 1604 and MAG Standard Detail 404-1
3. Vertical Location:
    a. New water mains, fire lines, and water service lines are not allowed to pass under detention basins
        i. This does not apply to landscape irrigation lines downstream of proposed backflow prevention devices or buildings

b. Hydrants, meters, blow-offs and valves shall not be located in washes, detention areas, private driveways, sidewalks, curbs or valley gutters
    i. Hydrants shall have a maximum bury depth of six (6') feet.
c. Hydrants that require adjustment as a result of improvements shall be adjusted using a "Gradlok" or approved equal when vertical adjustment is in excess of six (6") inches, refer to COC Standard Detail 1363

4.7.4 Dead-End Mains

A. The maximum length for a dead-end water distribution main shall be governed by water quality standards and shall be sufficient to provided minimum pressures and fire flows.
B. Capped dead-end mains shall be fitted with a flushing device per MAG Standard Detail 390, Type "B". Fire hydrants may be used as a flushing device. Flushing devices shall not be located in washes, detention areas, retention areas, sidewalks, driveways or paved areas.

4.7.5 Design Flows

A. The ultimate design flow within the City of Cottonwood's water transmission and distribution system will be based on the City of Cottonwood's current water master plan. Water demand for each development will be calculated using the average day demands with appropriate peaking factors applied, as shown in Table 4-1 to ensure that the existing distribution supply is sufficient. Designs will include all necessary improvements, including booster-pumping stations, reservoirs, mains and appurtenances to meet the system's ultimate demand. Design flow C factors shall be applied using Table 4-2.

TABLE 4-2: C-FACTORS

DIAMETER	C-FACTOR
6-inch	90
8- inch	110
10- inch	115
12- inch	120
16- inch	130
18- inch	130

1. Hydraulic analysis will demonstrate that the system will provide average day, maximum day demand, and maximum-day demand including fire flow. The average day to maximum day peaking factor is 1.7, and the max day to peak hour factor is 2.0. These factors shall be appropriately increased for restaurants and other high-demand water users.
2. A minimum of twenty (20) psi shall be maintained at the point of maximum fire flow demand during max day plus fire flow conditions. Impacts to surrounding areas shall also be considered.
    a. Water velocity criteria under maximum day demand conditions are as follows:

i. Velocity ≤ 5 feet per second (fps) for pipes < 36 inches diameter (Head loss, HL= < 10 feet/1,000 feet)

b. Velocity criteria under maximum day plus fire demand conditions is as follows:

i. Velocity ≤ 15 fps

3. Design flows for all distribution systems will be based upon flow and pressure of the existing system as documented by the Engineer of Record.
4. Prior to acceptance by the City Engineer, all platted subdivisions will conduct an additional flow test at the fire hydrants or flushing devices having the lowest and highest ground elevation within the subdivision.
5. Developments that cross pressure zone boundaries shall conduct a flow test within each pressure zone as outlined above. The results of this test, along with a copy of the final plans, shall be submitted to the City Engineer for review and acceptance.

4.7.6 Fire Hydrant Flow Test Requirements

A. Pressure and available flow information for existing water mains shall be obtained by having a flow test performed on the system at the developer's expense. Flow tests are required for all commercial projects, multi-family residential projects and public extensions of the City of Cottonwood's water distribution system. A private fire protection company shall perform the tests in accordance with AWWA manual M-17 and certify the results. The design engineer shall witness all tests and valves operated by City of Cottonwood Water Division's personnel. The certified flow test results shall be included in all master plans or design reports submitted to the Utilities Department. A copy of the flow test report shall be included when fire sprinkler plans are submitted.

B. Flow tests may be scheduled through the Cottonwood Fire Department at 928.634.2741 a minimum of 48 hours prior to the test.

4.7.7 Pressure Requirements for New Development

A. Pressure extremes in water systems result in the potential for contaminants to enter the network. Low pressures in the water system may allow polluted fluids to be forced into the system, and high pressures may cause ruptures or breaks in the network.

B. The static pressure in the distribution system shall not exceed one hundred twenty (120) pounds per square inch (psi), and the system shall be designed to maintain a minimum residual pressure of fifty (50) psi at the point of service (box and setter or meter) to be served by system pressure at maximum day demand conditions. The system will be designed to maintain twenty (20) psi minimum pressure under design maximum day plus fire flow requirements. The twenty (20) psi minimum pressure design requirement accounts for the safety factor included in conservative "C" factors to account for aging infrastructure and flexibility in locating pressure zone boundaries.

C. All distribution water mains, appurtenances and service lines will be designed for a minimum normal internal working pressure of one hundred fifty (150) psi.

D. Provisions shall be made to protect the system from water hammer pressures. The occurrence and severity of water hammer can be reduced by using pressure-release valves, surge tanks, variable frequency drives, soft start motor controllers and air chambers. In cases where pressures exceed one hundred twenty (120) psi or water hammer conditions are developed, all elements of the system shall be designed accordingly.

4.7.8 Pressure Reducing Valves (PRV's)

A. Approximate pressure zone boundaries and their respective elevations are shown in the City of Cottonwood's water model. Within the distribution system, or to interconnect to other zones, PRV's shall be required to maintain pressure zones within the distribution system or to interconnect to other zones. Distribution systems will not be designed to operate at pressures in excess of one hundred twenty (120) psi. PRV's shall be built in accordance with COC Standard Detail 1323. A minimum of one (1) PRV in each pressure zone will be designed with a high-pressure relief valve.

B. Vaults shall be located outside of paved areas adjacent to the back of curb or sidewalk. PRV's shall be located within the rights of way, an easement, or an easement within a private street tract, and shall be provided with unobstructed vehicular access, including parking. Curbs adjacent to PRV vaults shall be Type C or Type D in accordance with COC Standard Detail 1220-1, unless other access is provided that is acceptable to the City. Site grading shall route stormwater and discharge water from relief valves away from the vault. Site design shall consider and mitigate any impacts of discharge water on downstream improvements. The location of pressure relief risers shall be shown on the final plans.

C. The Engineer of Record shall specify in the design report and on final plans, the size of the main and low flow pressure reducing valves, the upstream system pressure, and the design downstream pressure setting.

D. The City of Cottonwood requires all metered services to have a pressure-regulating valve installed on the private service line.

E. The City of Cottonwood requires the installation of isolation valves on all PRV stations to facilitate the operation, maintenance, and expansion of the water distribution system.

4.7.9 Valves

A. The City of Cottonwood requires the installation of isolation valves to facilitate the operation, maintenance, and expansion of the water distribution system. Water main valves shall meet or exceed the pressure classification of the water main.

B. Gate valves, required to control the operation of the water system, shall be installed per MAG Standard Detail 301.

C. All valves shall be resilient seat/wedge gate valves, epoxy-coated inside per the American Water Works Association (AWWA) C-550 per MAG Specification 630.3.

4.7.10 Fittings

A. Joint deflection shall be discouraged, but where evaluated and allowed for, specific conditions shall not exceed seventy five (75%) percent of the pipe manufactures specification. Fittings may be required where more than two (2) pipe lengths are deflected.

B. A minimum distance between fittings shall be specified on the final plans for constructability. All fittings shall be identified on both the plan and profile view with station and elevations. The Engineer of Record is responsible for verifying the minimum distance necessary for the type and diameter of pipe and related fittings specified for the project.

4.7.11 Valve Locations

A. Shutoff valves shall be installed on water mains at locations within the distribution system that allow sections of the system to be taken out of service for repairs or maintenance without significantly curtailing service in other areas. Special consideration shall be given to the number of fire hydrants taken out of service. A sufficient number of valves shall be provided on water mains so that inconvenience and sanitary hazards will be minimized during repairs. Valves will be located such that closing no more than four (4) valves can isolate any section of the system.

B. Valve Location
    1. A valve shall be located on each side of a vertical alignment per COC Standard Detail 1370, creek, wash, railroad, or highway crossing.
    2. Valves shall not be located in curbs, sidewalks, driveways, valley gutters, bike lanes, and vehicle wheel paths.
    3. Provide a valve on each fire hydrant lateral and flange the valve to the tee. Provide a valve for all fire protection water supply connections in accordance with adopted Fire Code and City of Cottonwood Amendments. Refer to COC Standard Detail 1360.
    4. The preferred locations of valves shall be set at the intersecting street adjacent to other valves, or at a fire hydrant location.

C. Spacing
    1. Maximum spacing of water distribution main valves shall be as follows:
        a. In Commercial, multi-family, and industrial areas, valve spacing will not exceed five hundred (500’) foot intervals
        b. In single family residential, valve spacing cannot exceed eight hundred (800’) foot intervals or one (1) per block, whichever is less
        c. In single family residential protected by fire sprinklers per City Ordinance 344, valve spacing will not exceed one thousand (1,000) foot intervals
    2. Maximum spacing of water transmission main valves will be as follows:
        a. Valves spacing will not exceed one thousand three hundred twenty (1,320’) feet
        b. Intermediate access points shall be provided between valves for leak detection purposes

D. Install all tees with a valve on the lateral main, so that the lateral can be taken out of service without interrupting the supply to other locations. At intersections of distribution mains valves shall be required on each leg.
E. All valves require valve boxes installed per COC Standard Detail 1391. All valves shall be installed with a debris cap. The debris cap handle shall be the appropriate color to indicate valve type. Refer to COC Standard Detail 1391.
F. All valve frame and cover adjustments will be per COC Standard Detail 1391.

4.7.12 Air Release Valves

A. Air release valves shall be installed at all local high points of water mains four (4") inches or larger in diameter, as follows:
    1. When water main changes from a positive slope to a zero slope or a negative slope
    2. Vertical alignment changes that cross under or over another facility, such as other utilities, drainage washes, etc.
    3. All air release valves shall be per COC Standard Detail 1317 or 1322, as applicable for size

4.7.13 Thrust Restraint

A. Thrust blocks shall not be allowed for new construction on the City of Cottonwood's water system unless approved in writing by the City Engineer. Thrust restraint shall be met by:
    1. Welded joints in steel pipelines
    2. Mechanical joints in Ductile Iron Pipelines
    3. Locking gasket and ring systems acceptable to the City Engineer
B. All valves shall be considered dead ends for thrust restraint.
C. COC Standard Details 1303-1 and 1303-2 include acceptable means of joint restraint for both horizontal and vertical deflections. Vertical slopes that exceed twenty (20%) percent require restrained joints, slopes exceeding twenty five (25%) percent require additional anchoring, in addition to restrained joints, to prevent pipe movement and minimize settling. The Engineer of Record shall verify the water pressures and earth bearing pressures assumed by the details. Where joint restraint is not proposed, per COC Standard Details 1303-1 and 1303-2, the Engineer of Record shall submit joint restraint analysis with the plans for review and comments. All restrained pipe lengths shall be specified on the plans, or referenced to a COC Standard Detail.
D. Couplings, Joints, Gaskets, and Flanges
    1. Couplings, joints, gaskets, and flanges shall conform to Section 610.10 of the MAG Uniform Standard Specifications or equal, unless otherwise approved.
        a. Thrust Restraint: Joint restraint shall be used at all bends, elbows, tees, crosses, dead ends, stubs, curb stops, fire hydrants, taps, and valve locations on water mains where water flow changes direction or is stopped. The joint restraint limits shall be shown on the plan and profile view. Restrained joint analysis shall be prepared and

submitted when necessary keeping in mind that concrete thrust blocks are not to be considered in the analysis.

b. Acceptable restrained joint systems include the following Manufactures:
   EBAA Iron Inc.
   Ford Meter Box Company Inc.
   Romac Industries
   Tyler Union
   US Pipe

c. Ductile Iron Pipe (DIP) joint restraint shall comply with COC Standard Details 1303-1 and 1303-2.

4.7.14 Electronic Markers

A. Tracer wire shall be placed along all public water mains, service connections and fire lines. All splices of trace wire shall be Copperhead Snakebite or 3M DBR moisture displacement connectors.

B. A continuity test will be performed at the completion of installation. Passing test results shall be provided for all pipe segments within the Engineer of Record's as-built data and plan set.

C. Trace wire stations shall be required on all mains without sufficient valves and other points necessary to access the wire to maintain accurate signal strength.

D. Maximum distance between test stations shall not exceed five hundred (500') feet. Refer to COC Standard Detail 1319-2.

4.7.15 Pipe Cover

A. Water mains shall be installed to minimum and maximum depths measured from the proposed finished grade to top of pipe as follows:
   1. Water main shall have a minimum cover of four (4') feet
   2. Public water mains that are installed through undeveloped property (i.e., locations where the final finished grade elevation is not known, particularly along future street alignments), shall have a minimum cover of five (5') feet from the existing grades.
   3. Subsequent fills that produce a cover depth in excess of six (6') feet shall require the main to be vertically realigned within the four to six (4'-6') foot envelope
   4. Maximum cover over water mains shall be six (6') feet, except at vertical re-alignments necessary to avoid conflicts with other utilities and storm drains

B. If a water main is installed within an area to be filled at a later time, adequate pipe protection shall be provided. This may include a temporary berm or constructing the water main to a minimum cover below existing grade. The Engineer of Record shall notify the Public Works Department of such occurrences and address them in the design report or master plan and civil plans.

C. Concrete encasement of water mains is prohibited to achieve separation from sewer.

4.7.16 Wash Crossings

A. All wash crossings will be constructed using restrained joint Class 350 (CL350) Ductile Iron Pipe (DIP). Bury requirements to place water mains under washes or channels shall be based upon the scour depth of the 100-year peak design discharge (Q100) in the channel or wash. The minimum depth of bury below the design flow line of the channel or wash shall be per EDSM, Table 6-7, unless site specific geotechnical and hydraulic data is provided.

B. Wash crossings with a one hundred (100) year flow above five hundred (500) cubic feet per second (cfs), shall have the scour depth estimated using Arizona State Standard Attachment SSA 5-96, Guideline 2, Level I, as published by the Arizona Department of Water Resources. The Engineer shall estimate the depth of scour and design the top of pipe to be three (3') feet below the estimated scour depth. The engineer shall provide a detailed analysis of the scour depth with final plans for review and approval.

C. All pipelines that must be located within the scour zone or do not meet the minimum required depth of bury, as indicated above, shall be protected by installing a cut-off wall, and energy dissipation downstream of the pipeline to stabilize the scour depth to a minimum of three (3') feet above the pipeline. The engineer shall design the cut-off wall energy dissipation and include details on the improvement plans. The City Engineer shall review pipe protection and scour stabilization requirements on a case-by-case basis.

4.7.17 Separations & Vertical Realignments

A. For the protection of the public water supply from contamination the Engineer of Record shall maintain separation distances in accordance with the Arizona Department of Environmental Quality Engineering Bulletin 10, MAG Specification Section 610.5 and MAG Standard Details 404-1 and 404-2 Water and Sanitary Sewer Separation/Protection.

B. Vertical separation of water, reclaimed water, and sanitary sewer mains shall comply with MAG Standard Detail 404-1. Where conditions prevent adequate horizontal and vertical separation:
    1. Both the water, reclaimed water and sewer main will be constructed of Class 350 (CL 350) Ductile Iron Pipe (DIP) with restrained joints or
    2. Where the existing water main is other than restrained ductile iron, the water mains shall be replaced with restrained DIP per MAG Standard Detail 404-2, and/or
    3. Where the existing or proposed sewer main is other than restrained Ductile Iron Pipe, the sewer main shall be replaced with Protecto 401 epoxy lined, restrained DIP per MAG Standard Detail 404-2.

C. Separation of water from all utilities will conform to COC Standard Detail 1402.

D. Water mains crossing over culverts and storm drains shall maintain both a minimum of twenty four (24") inches vertical separation and the minimum depth of bury. If the design cannot provide these clearances, a vertical realignment may be required.

E. Separation from Storm Drains and Culverts: Water mains shall maintain four (4') feet horizontal and two (2') feet vertical separations from storm drains and culverts. Water mains crossing less than two

(2') feet below a storm drain or culvert shall require additional protection such as the use of restrained joint DIP or placing the water main in a casing pipe. Air release valves and isolation valves shall be installed per the following:

1. Isolation valves will be installed on each side of the vertical realignment
2. The Public Works Department may consider the location of adjacent valves, fire hydrants, and water service mains to help minimize valves at vertical realignments
3. Install air release valves at localized high points where air entrapment or cavitation may occur
4. Do not place tees, fire hydrants, service lines, and other appurtenances within any portion of the vertical realignment

4.7.18 Service Lines & Meters

A. The water service line and meter shall be sized based upon the total daily demands for the development and the recommended maximum capacity. The minimum size service tap, saddle, line and meter set shall be one (1") inch.

B. That portion of the water service from the water main up to, and including the brass nipple downstream of the meter is public and shall be maintained by the City of Cottonwood as shown in COC Standard Detail 1316. That portion of the water service beginning at the curb stop after the meter is private and shall be maintained by the property owner. Design of the private on-site portion of the water service shall comply with the current plumbing code and shall include a customer shutoff and pressure-regulating valve. Refer to COC Standard Detail 1316.

C. Due to the City of Cottonwood's water billing rate structure, meter sizes shall not exceed the size of the service. (e.g. a one and one half (1 ½") inch meter shall not be allowed on a one (1") inch service). Extra attention is required when sizing services for custom home lots where demands occasionally necessitate meter sizes exceeding one (1") inch.

D. Service lines are necessary to meet domestic, fire and irrigation demands. Residential fire sprinkler and irrigation demand is normally supplied through the domestic service line and meter. Commercial developments may use separate meters for building and landscape service but will provide separate lines for fire protection.

E. Installation of metered one (1") inch to two (2") inch water services shall be in accordance with COC Standard Detail 1316. Installation of three (3") inch to six (6") inch metered services shall be in accordance with COC Standard Detail 1321.

F. Final plans shall show locations of service lines and meters to each unit referenced with stations and dimensions, or offsets, from the street centerline or monument line. Service lines and meter boxes shall be located within a public right of way or a utility easement per COC Standard Detail 1316.

G. Service taps are not permitted on a fire line, which is designed to service private fire sprinkler systems and/or a fire hydrant.

H. Water services connections shall be designed perpendicular to the main. Lines shall be continuous from the main to the meter with no splices. Water service lines shall have six (6') feet minimum horizontal separation from sanitary sewer service lines.

I. No service connections or fire protection systems shall be made directly to water transmission mains.

J. All non-CTS Polyethylene service lines in sizes three quarter (¾") inch through two (2") inch which are exposed during construction, shall be replaced in their entirety with one (1") inch minimum CTS Polyethylene Water Tubing. This includes the replacement of service saddles, box and setter and corporation stop in all cases. Refer to COC Standard Detail 1316.

K. The Developer shall install all water services, meter setter and meter boxes in new development projects.

   1. Water meter boxes shall be installed out of traffic areas and behind back of curb and sidewalk. Refer to COC Standard Detail 1316.
   2. Metered Services:
      a. Subdivision plans shall provide a typical water service, location detail
      b. Where water services are being designed for isolated locations, provide stationing and offset to property line
      c. Minimum water service size is one (1") inch with a five eighths (⅝") by three quarter (¾") inch meter

L. Existing water services not used will be noted on the approved civil plans and the as-built plan as abandoned at the main with full circle stainless steel repair clamp.

4.7.19 Backflow Prevention & Cross Connection Control

A. The installation of Backflow Prevention Assemblies is required for all developments with the exception of single family residential unless the property has a groundwater well. The following types of service connections shall require backflow prevention to be installed: commercial meters, master metered systems, irrigation meters, construction meters, multifamily residential meters, and fire protection connections.

B. Residential uses are required to have a Backflow Prevention Assembly when a well, pond, submerged make up line, automatic irrigation system or fire sprinkler is present, which may raise the degree of hazard for the site.

   1. The type of backflow assembly required is determined by the degree of hazard. Reduced Pressure Zone Assemblies (RPZA) shall be required for all commercial, multifamily residential, master metered systems, private potable water systems and irrigation meters. A testable Double Check Valve Assembly (DCVA) shall be required for all fire protection connections.
   2. The City of Cottonwood Backflow Prevention Program, Cottonwood Municipal Code, Title 14, requires that Backflow Prevention Assemblies be installed according to COC Standard Details 1324 or 1325, as applicable for size and in accordance with the adopted plumbing code.
   3. All backflow prevention assemblies shall be approved by the "Foundation for Cross Connection Control and Hydraulic Research of the University of Southern California", and the City of Cottonwood Public Works Department.
   4. Initial certification testing is required upon establishment or restoration of water service to the meter. A certified backflow prevention device tester, approved by the Public Works

Department, shall make all testing, maintenance and repairs to the backflow prevention assembly at the water service customer's expense. The initial testing and the required annual testing are the responsibility of the water service customer.

5. Fire protection systems require the installation of a City of Cottonwood approved testable double check valve backflow prevention assembly (DCVA). Refer to COC Standard Detail 1364.
    a. Fire lines that feed building fire sprinkler systems may install a DCVA in an NFPA approved fire riser room if the distance from the public/private interface to the riser room is less than one hundred and fifty (150') feet. In this case, the DCVA shall be mounted vertically on fire riser and prior to any piping that consists of material not IPC approved for potable water piping. The DCVA shall be installed to allow for clearances per the adopted Fire Code.
    b. Fire Lines that do not meet the criteria in 4.7.19.B.5.a. require that a DCVA shall be installed in a vault as close to the public/private interface as practicable but not within the utility easement or ROW. The vault shall not be installed in any drainage, retention or detention area, driveway, or parking lot entrance/exit. If the vault is located within a paved area, the vault and lid shall be traffic rated. The DCVA shall be installed in the vault to provide at least minimum clearances per the adopted Fire Code.
    c. The location of the backflow prevention assembly shall be indicated on the approved civil plans.

C. Every effort shall be made to locate the water meter and vault in an area that can accommodate a properly installed backflow assembly. When the location of a backflow preventer cannot be accommodated adjacent to the meter, the designer shall:
    1. Request in writing to separate the backflow assembly from the meter with a detailed explanation why the applicable standard cannot be met as well as the proposed alternative location and measures that will be taken to ensure no taps can be made between the meter and the device
    2. Backfill the water line between the meter box and the backflow preventer with 1-sack slurry Controlled Low Strength Material (CLSM) per MAG Section 728. CLSM shall be placed to the full width of the trench and to six (6") inches above top of pipe
    3. Note on the plans that inspection of the water piping connecting the meter to the backflow preventer be inspected by the City of Cottonwood prior to CLSM and backfill

D. The City of Cottonwood does not allow the use of potable water for construction purposed under any circumstances.

4.7.20 Tract & Easement Requirements

A. All public water mains and appurtenances located outside of a public right of way or a private street tract with easement overlay shall be placed in the center of a minimum twenty (20') foot wide easement. The water main shall be located a minimum of ten (10') feet from the edge of easement.

The easement shall have legal access from a public right of way, shall be free of obstructions, shall not be located in a fenced area, and will be accessible at all times to City of Cottonwood service equipment such as trucks, backhoes, etc. Water main easements, located outside of paved areas, shall have a twelve (12') foot wide all weather access road per COC Standard Detail 1607.

B. The City Engineer may require additional easement width if in their opinion excessive laying depth of the pipe would require the additional width for maintenance purposes.

C. Any re-vegetation within the easement shall consist of low growing shrubs or plant material acceptable to the City Engineer. Trees may be located along the edge of the easement but not within ten (10') feet of the water main as measured to the trunk of the tree.

4.8 FIRE PROTECTION

4.8.1 General Information

A. It is the intent of the COC Fire Department to establish requirements consistent with nationally recognized practices for safeguarding life and property from hazards of fire and explosion arising from the storage, handling and use of hazardous substances, materials and devices, and from conditions hazardous to life and property arising from the use or occupancy of buildings or premises.

B. For information related to the most currently adopted plumbing and fire codes, see the Cottonwood Municipal Code (CMC) and the International Fire Code (IFC), with amendments.

C. If the property is to be supplied with domestic service and with fire flows from a storage tank or facility, the Engineer of Record shall provide a report indicating that the required pressures and volumes exist, as required by the Fire and Public Works Departments, and are available to meet the required fire demands.

D. Particular attention shall be given to the fire hydrant locations on final plans for infrastructure where future building locations are not identified. Final building location and elevation may necessitate the addition of water mains, fire hydrants, and/or a fire pump to serve the structure. Compliance with the fire hydrant spacing and pressure requirements are the responsibility of the party requesting a building permit.

4.8.2 Fire Flow Requirements

A. Water distribution facilities shall be sized to deliver the following minimum fire flows:

    1. One thousand five hundred (1,500) gallons, per minute (gpm) minimum for commercial, industrial, multi-family residential properties and single-family dwellings three thousand six hundred (3,600) square feet or greater
    2. Five hundred (500) gallons, per minute (gpm) minimum, for single-family residential properties under three thousand six hundred (3,600) square feet
    3. Larger structures over three thousand six hundred (3,600) square feet and non-sprinkled structures may require fire flow above one thousand five hundred (1,500) gpm depending on construction type

4. The fire flow requirements are subject to change. All fire flows as stated in the currently adopted International Fire Code, shall be met

4.8.3 Hydrant Locations

A. The spacing of fire hydrants is to be measured along the street or roadway in which a fire hose would be laid. This spacing is measured along the curb line and shall be inclusive of the distance along a private driveway to the proposed structure.

B. The Fire Department will stipulate fire hydrant locations during the site planning process or on the final plans review. The following standards shall be used as a guide:

1. The Fire Department will stipulate fire hydrant final locations during the site planning process or during the plan review
2. Fire hydrants shall be provided along required fire apparatus access roads and adjacent public streets
3. The minimum number of fire hydrants available to a building complex or subdivision shall not be less than that determined by spacing requirements listed in the adopted Fire Code. Exception: The fire chief is authorized to accept a deficiency of up to ten (10%) percent where existing fire hydrants provide all or a portion of the required fire hydrant service
4. Existing fire hydrants on public streets may be considered for adjacent development. Existing fire hydrants on adjacent properties shall not be considered available unless fire apparatus access roads extend between properties and easements are established to prevent obstruction of such roads
5. Regardless of the average spacing, fire hydrants shall be located such that all points on streets and access roads adjacent to a building are within the distances listed in the adopted Fire Code

4.8.4 Fire Lines & Building Sprinkler Lines

A. The location of on-site fire lines and taps shall be determined by the relative location of the fire department connection, riser location, emergency access and fire hydrant locations.

B. The size of fire lines shall be determined by the Engineer of Record for design of the project based on required fire flow demands. Fire systems shall include a backflow preventer in accordance with 4.7.19.B.5.

C. Show all fire lines on the approved civil site plan.

D. Fire lines shall not be connected to transmission mains.

E. Installation of one and one half (1 ½”) inch to two (2”) inch fire service lines use a saddle connection per COC Standard Detail 1316, and installation of three (3”) inch and larger fire service lines use a tee and valve per COC Standard Detail 1340. Meters are not required on services used solely for fire sprinkler systems, except one (single-family) and two-family (duplex) dwellings. All private fire sprinkler lines shall be installed with trace wire per COC Standard Detail 1319-1.

F. Fire service lines shall be installed perpendicular to the main within the right of way or easement.

G. Excessive lengths of line, as determined by the City Engineer, may require additional backflow protection near the main to prevent stagnant water flowing into the active portions of the City's system.

4.8.5 Fire Department Connection

A. If a remote Fire Department connection for a sprinkler system is required, it shall be installed between four (4') feet and eight (8') feet from the back of curb of a public or private roadway, on-site driveway or sidewalk. The location of the sprinkler system connection shall be unobstructed and readily accessible to the Fire Department. This connection shall also be within an appropriate distance of a fire hydrant as determined by the Fire Department.

B. Fire Department connections, whether remote or wall mounted, need to be identified and coordinated on the improvement plans and on the building plans site plan for relationship to fire lanes and fire hydrants. All Fire Department connections shall be appropriately clear of glazing and other hazards and protected from vehicular damage.

C. Pavement markers for Fire Department sprinkler system connections shall be provided.

4.8.6 Auxiliary Storage Tanks

Minimum water pressures and discharge flow shall be in accordance with the adopted Fire Code. A fire pump package installation may be required when the building's construction type, occupancy fire load commodities classification, volumetric building areas, building height and individual square footage areas per floor level produce a pressurized fire flow supply in excess of the water transmission mains capabilities.

ARTICLE 5: RECLAIMED WATER

5.1 INTRODUCTION

5.1.1 Purpose

The goal of the Reclaimed Water System Planning and Design Article is to provide technical management, comprehensive planning, and sound engineering to expand and maintain a reliable and safe reclaimed water supply, distribution, and storage system. Engineering standards, guidelines, and geometric requirements for the design and construction of public reclaimed water improvements within the City of Cottonwood will result in high-quality customer service.

5.1.2 Applicability

A. The standards and guidelines of this Article shall apply to the construction, modification and extension of all reclaimed water distribution mains, pump stations and other appurtenances as well as any modification of the public reclaimed water system to be owned, operated and maintained, by the City of Cottonwood (COC). Privately funded reclaimed water mains, proposed to be, connected to the City of Cottonwood's system are reviewed for compliance, with City of Cottonwood standards. Private reclaimed water mains are prohibited in the City of Cottonwood. This Article is intended for use in plan design, preparation, and review process.

B. Developers are required to install all improvements necessary, including off-site improvements to provide reclaimed water service for irrigation purposes to their development in accordance with, City Code, this Article and the most current water, reclaimed water and wastewater model study.

5.1.3 Design Standards & Guidelines

A. New public reclaimed water supply distribution and storage facilities shall be designed in accordance with Article 1.

B. A civil engineer registered in the State of Arizona shall analyze, design and seal all proposed reclaimed water system project plans and specifications that are determined by the City Engineer to have an impact on the reclaimed water distribution system. The effects of peak demands shall be examined to ensure proper sizing and layout of proposed reclaimed water system facilities, including impacts to existing offsite facilities where deemed appropriate by the City Engineer.

C. All components and related appurtenances for construction and repair of reclaimed water infrastructure shall be domestically manufactured, certified and submitted to the City for review and approval prior to installation.

5.1.4 State Regulations

A. Arizona Department of Environmental Quality (ADEQ)
ADEQ's Engineering Manual Bulletin No. 8 "Disinfection of Water Systems" and No. 10, "Guidelines for the Construction of Water Systems" and the Arizona Administrative Code, "Title 18-9-602 – Pipeline Conveyances of Reclaimed Water", contain specific requirements for submittals, approvals, and notifications when extension of a public reclaimed water main is proposed. The developer and the

Engineer of Record are expected to be aware of and comply with the above referenced regulations. Additional information can be found on the ADEQ website at www.azdeq.gov/

1. Before civil infrastructure construction permits are issued, the developer shall submit to the City Engineer an Approval to Construct (ATC) from ADEQ or the local delegated authority.
2. Prior to the City Engineer issuing an Approval to Operate (ATO) and release from the City of Cottonwood, the developer shall deliver to the City a signed Approval of Construction (AOC) from ADEQ or the local delegated authority

B. Yavapai County Environmental Services Department (YCESD)

1. Before civil infrastructure construction, permits are issued, the developer shall submit to the City Engineer an Approval to Construct (ATC) from ADEQ through the YCESD delegation.
2. Prior to the City Engineer issuing an Approval to Operate (ATO) and release from the City of Cottonwood, the developer shall deliver to the City a signed Approval of Construction (AOC) from ADEQ through the YCESD delegation.

C. City of Cottonwood (COC)

1. Issuance of an Approval to Construct by YCESD or ADEQ does not constitute an approval of plans and reports by the City of Cottonwood. No construction shall commence prior to the City of Cottonwood City Engineer issuing a permit.
2. An as-built plan submittal is required prior to receiving an "Approval to Operate and Release" from the City of Cottonwood.

5.2 GENERAL INFORMATION

5.2.1 Reclaimed Water Availability

The City of Cottonwood reclaimed water service area is located within the City of Cottonwood Water Service Area. The City of Cottonwood reclaimed water service area accounts for approximately ten (10%) percent of the land within the City of Cottonwood Water Service Area and is subject to reclaimed water contracts or settlements and known under a general term of reclaimed water service agreements.

5.2.2 Agreements

Yavapai County Community College

Cottonwood Ranch Subdivision

5.3 PLAN SUBMITTAL REQUIREMENTS

Improvement plans submitted to the City of Cottonwood for approval shall adhere to professional engineering standards governed by the State of Arizona Board of Technical Registration. Improvement plans shall be complete and shall comply with City of Cottonwood and State Board requirements. Improvement plans that do not meet industry standards, or are incomplete, shall be returned by the City of Cottonwood without review comments and shall be determined to be an incomplete project submittal. Repetitive submittals of non-compliant and incomplete improvement documents may be subject to State of Arizona Board of Technical Registration review.

5.4 RECLAIMED WATER SYSTEM REPORTS

5.4.1 General Information

A. All projects shall be required to submit a Reclaimed Water Master Plan Report and/or a Reclaimed Water System Design Report. The purpose of these reports is to provide the City of Cottonwood with information regarding the potential reclaimed water demands of the project and verify the capability of the City of Cottonwood to provide the reclaimed water use that will be required.

B. All Reclaimed Water System Reports shall be prepared under the direction of a licensed civil engineer in the State of Arizona. The report shall be sealed and signed by the Engineer of Record in accordance with the requirements of the State of Arizona Board of Technical Registration, and submitted to the City Engineer.

C. Reports shall provide an analysis of the impact that a development will have on the City of Cottonwood's reclaimed water system. The objectives of the Reclaimed Water Reports are to verify the reclaimed water demand, the system's ability to supply and maintain sufficient flows, and the available system flows, pressures, and proposed hydraulic regimes. All reports submitted to the City of Cottonwood for review shall be prepared in accordance with the following guidelines:

1. Format:
    a. The report shall be on letter sized paper (8 ½" x 11")
    b. All reports shall have a table of contents, including page numbers
    c. Maps and other supporting materials larger than folded ledger size paper (11" x 17") shall be placed into sleeves as an appendix to the report
    d. A civil engineer licensed to practice in the State of Arizona shall seal each report
    e. The project name shall be located on the cover
    f. The name, address, and phone number of the developer/owner and Engineer of Record shall be stated on the cover
    g. The original submittal date and all subsequent revision dates shall be located on the cover
    h. Common spreadsheet formats shall be compatible with MS Excel
2. Existing Conditions:
    a. Reference any existing master plans or design reports applicable to adjacent development
    b. Include excerpts from existing plans or reports as applicable
    c. Indicate the dates, times and results of certified flow testing of the existing reclaimed water system
    d. Include a description based on all parts or reference within a platted development
    e. Describe the existing topography, and landform features
    f. Include the location and description of existing utilities in the vicinity
    g. Describe the existing and proposed site zoning and land uses

h. Include reference to elements of the City of Cottonwood's General Plan and identify any designated character area or studies that will affect the project's design

3. Proposed Conditions:
    a. Summarize the proposed development. Include a site plan that indicates the layout of the proposed development with a survey a minimum of one hundred (100') feet beyond the project limits or as determined by the City Engineer
    b. Identify the location and size of all proposed connection(s) to the City of Cottonwood's reclaimed water system
        i. Show all looping and/or extension of reclaimed water mains into the site
        ii. Indicate the location of all pressure zone boundary lines
    c. Provide a looped system for all reclaimed water supply demands, maintain water quality standards, and maintain system redundancy for operational flexibility
    d. Reference which reclaimed water zone the site is within and address all required fire flows and system pressures
    e. Address any maintenance responsibilities of the proposed reclaimed water system
4. Mapping:
    a. All mapping shall conform to City of Cottonwood CADD standards and the EDSM, Article 9, Survey
    b. The project name shall be located on each sheet
    c. The name, address, and phone number of the developer/owner and Engineer of Record shall be stated on each sheet
    d. The original submittal date and all subsequent revision dates shall be located on the exhibits
    e. All maps shall be prepared to an appropriate scale that is legible
    f. All proposed or existing on-site and off-site facilities including, but not limited to, pump stations, transmission and distribution mains, and reservoirs
    g. All proposed or existing street locations, parcel boundaries, and proposed lots within each parcel
    h. Label contour lines at two (2') foot intervals
    i. Indicate pressure zone boundaries, pressure-reducing valves (PRV'S), and corresponding zone valves
    j. Include size and pressure settings for all pressure reducing valves (PRV).
    k. Include a vicinity map showing existing and proposed streets to a distance of one (1) mile from the exterior boundaries of the project

5.4.2 Reclaimed Water Master Plan Report Content

A. When phasing is contemplated or when required by the City Engineer, a Reclaimed Water Master Plan Report shall be prepared in accordance with the requirements of the Engineering Design Standards Manual (EDSM), Section 5.4. The report shall also address, but not be limited to the following:

1. The report shall specify the terms and requirements for reclaimed water service to the development, including any off-site improvements
2. All development project owners shall be responsible for determining their specific reclaimed water system needs between interim and buildout
    a. Include the projections for future surrounding developments based on the adopted General Plan Land Use Map to ensure there is no adverse impact on the system
3. A computer water network model, which is compliant with the EDSM, Section 5.4.4 shall be used for the analysis of pressure and flow within the distribution system, verifying that adequate pressures will be available within the proposed development based on projected demands and shall include the following:
    a. If certified flow tests performed on the system during peak demand to which the project is to be connected do not show that sufficient capacity exists, the computer model will be used to determine the required on-site and off-site facilities, such as pump stations and pipelines, necessary to serve the project
    b. If the proposed development requires a change in zoning that increases density or proposes a reclaimed water system different from the City of Cottonwood's Reclaimed Water Master Plan, then additional upstream and downstream, off-site analysis will be required
    c. Modification of existing or creation of new pressure zones shall require approval of the City Engineer
4. Master plan mapping shall demonstrate the following:
    a. Demonstrate compliance with the City of Cottonwood's Reclaimed Water Model, which encompasses the respective area
    b. Master planned developments that design a distribution system that will be phased shall provide a synopsis of the phasing with modeling backup to the Utilities Department prior to acceptance of the developments Reclaimed Water Master Plan
    c. Each phase of the reclaimed master plan must be a standalone document when submitted to the City of Cottonwood for review of that specific phase

5.4.3 Reclaimed Water Design Report Content

A. A Reclaimed Water Design Report shall be prepared in accordance with the requirements of the Engineering Design Standards Manual (EDSM), Section 5.4.1.
B. The system design shall comply with the Arizona Department of Environmental Quality (ADEQ), Engineering Manual Bulletin No. 10 and the Arizona Administrative Code R18-9 requirements for system performance and redundancy. The developer shall coordinate reclaimed water system improvements with the City of Cottonwood reclaimed water model and the Capital Improvement Plan.
C. In addition to the general requirements in the EDSM, Section 5.3.1 and 5.4.1, the Reclaimed Water Design Report shall at a minimum, include the following:
    1. Design Documentation

a. Note the design compliance with the latest revision of this manual and all other applicable design standards and codes
b. Include a narrative of which design procedures, policies and methodologies will be incorporated into the design engineering of the reclaimed water system
c. List the title and version of any software used in the design analysis

2. A summary of the anticipated reclaimed water demands for the project
   a. The priority of obtaining reclaimed water design flows for a non-residential facility is, 1) flow measurements from the actual facility; 2) the use of flows from similar facilities in the immediate area; 3) the use of similar flows from similar facilities in other areas; and 4) flow tables as listed in the EDSM, Article 5, Table 5-1
   b. Flows may be calculated on a sub-area basis, however, total flows for the entire development shall also be provided
   c. Flow rates shall include average day, maximum day and peak hour flow demands

5.4.4 Reclaimed Water Modelling

A. Reclaimed Water System Model Analysis
   1. The Engineer of Record shall provide a model of the planned Reclaimed Water System Master Plan Report or Reclaimed Water System Design Report as delineated in the EDSM, Sections 5.4.1 and 5.4.2. This modeling shall be required where new public reclaimed water mains are being added, modified or extended in the City of Cottonwood system. The model shall provide the data necessary to validate that reclaimed water demands are met to support the project.
   2. Infill projects may not require a model. If a model is not required, include narrative of the proposed connections to the City of Cottonwood.

B. When reclaimed water hydraulic modeling information is needed, the following requirements shall be met to deliver model data to the City of Cottonwood.
   1. Model Software:
      The City of Cottonwood currently uses the Bentley WaterCAD software. The modeling software used to evaluate a proposed development does not need to be the same software, but the data shall be provided to the City of Cottonwood in EPA-NET 2.0 format.
   2. Model Development:
      The developer or developer's engineer shall create and utilize a hydraulic model to demonstrate that the proposed infrastructure size, hydraulics, etc. are adequate and satisfy the City of Cottonwood’s requirements for domestic demands. The City of Cottonwood may provide specific boundary conditions upon request. The model information shall be delivered to the City of Cottonwood to be added to the City of Cottonwood's model, where modeling evaluations may be performed to verify that the proposed infrastructure and demands will not negatively affect the existing COC system. Proposed reclaimed water systems shall evaluate the City of Cottonwood's overall reclaimed water supply, pumping, and storage requirements.

C. Hydraulic Model Data:

1. All drawings and model data shall use the City of Cottonwood coordinate system and datum in the EDSM, Article 9.
2. Model data shall be free of Topology errors in accordance with commonly accepted engineering practices prior to submission to the City of Cottonwood.
3. Reclaimed Water Distribution System Attributes:
    a. Mains – Diameter, length, material, location, connectivity with other entities
    b. Reservoirs – Base elevation, height, volume, location, connectivity with other entities
    c. Pump Stations – Layout, number of pumps, pump curve or design point, elevation, location, connectivity with other entities, pump control scheme
    d. Nodes (Connection Points) – Location, elevation, demand
    e. Pressure Reducing Valves and Tank Fill Valves – Location, connectivity with other entities, elevation, number of valves, diameter and valve set points
    f. Wells – Location, connectivity, design flow, control scheme
    g. Polygons - Pressure zone boundaries, zoning/density
4. All model data shall include the following:
    a. Demands shall be calculated per EDSM Section 5.4.3.C using average day reclaimed water demands in gallons per day
    b. The system shall be capable of providing maximum day demand
    c. Verification of the ability of the proposed system to provide adequate flow and pressures under the various demand combinations shall be provided
    d. Pipes and nodes – Include item identification, demands, elevation, hydraulic grades, length, status, diameter, velocity, head loss/1000 ft
    e. Reservoirs and pumps – Provide identification, diameter, height, elevation, upstream and downstream hydraulic grade, number of pumps, pump capacity and proposed pump curves
    f. Pressure Reducing Valves (PRV's) – Provide identification, size, elevation, upstream and downstream hydraulic grade settings
5. Hydraulic Evaluation:
    a. New developments that do not constitute infill shall be modeled to determine if the infrastructure is adequate to serve the development and provide the level of service as defined by the City of Cottonwood's performance criteria.
    b. The City will use the City of Cottonwood's reclaimed water model to verify the ability of the existing reclaimed water distribution system to deliver adequate water to the proposed development per the design Engineer's proposal.
    c. The following scenarios shall be modeled:
        i. Average Day Demands
        ii. Maximum Day Demands
        iii. Peak Hour Demands

d. Model simulations shall be documented in a graphical and tabular format to demonstrate that the reclaimed water distribution system shall provide the required flow at suitable pressures and reclaimed water main velocities.
e. Boundary conditions that represent the interface between the development and the rest of the distribution system, shall be explained clearly.

5.5 RECLAIMED WATER SYSTEM DEMAND

5.5.1 System Demand

The reclaimed water system demand describes the standards against which the reclaimed water infrastructure is measured to determine the criteria of the proposed infrastructure. This reclaimed water system demand criteria is based on the Arizona Administrative Code (AAC) and other applicable regulatory standards.

5.5.2 Infrastructure Sizing

Infrastructure shall be sized to supply the maximum day demand based upon the size of the landscaped area to be irrigated.

5.6 PLANNING

5.6.1 Comprehensive Planning

A. The City of Cottonwood has developed a Reclaimed Water System Model to ensure that future improvement requirements are achieved through an orderly development of the City of Cottonwood planning areas. Any engineer working on the design of public reclaimed water infrastructure shall develop plans consistent with the appropriate sections of the City of Cottonwood's Model.
B. Reclaimed water mains shall be installed along the entire length of the property line frontage of the property being developed. The property line frontage is defined as that portion of a parcel of property that abuts a street, easement, or public rights of way. If a parcel to be developed has more than one frontage, improvements may be required to be installed along all frontages.

5.6.2 Reclaimed Water Facilities

A. Reclaimed water facilities (wells, reservoirs, booster pump stations, etc.) are designed and constructed by the City of Cottonwood through its capital improvement program. Developers needing to construct reclaimed water facilities shall contact the Utilities Department and request a meeting to coordinate the design of these facilities. The developer shall be prepared to address how the proposed system will conform to the City of Cottonwood's Reclaimed Water Master Plan. The City of Cottonwood will address design issues and the review process for these facilities.
B. Unless otherwise agreed to in writing by the City Engineer, reclaimed water facilities shall be located on a tract or lot dedicated to the City of Cottonwood (conveyed by a general warranty deed) and accompanied by a title policy in favor of the City of Cottonwood.
C. Reservoirs

Storage facilities shall provide operational storage for peak demands above maximum daily demands, emergency storage for power outages and line breaks. Facilities shall be designed to maximize the efficient use of reclaimed water production and pumping facilities. Therefore, storage in each designated service area shall exceed the volume of the sum of 1, 2 and 3 below or one average day demand, whichever is greater.

1. Operational storage equaling twenty (20%) percent of maximum daily demand
2. Emergency storage equaling ten (10%) percent of maximum daily demand
3. The City Engineer shall determine final sizing and dimensions.

D. Booster Pump Stations

1. Booster pumps shall be designed to maintain adequate pressure for reclaimed water supply. All stations shall provide at a minimum; variable frequency drives, backup power supply, separate electrical room and SCADA compatible with the City of Cottonwood's current system. Designers shall refer to Engineering Bulletin No. 10, Arizona Department of Environmental Quality, for additional design criteria. The City Engineer shall determine final sizing, number of pumps, pump capacity, supervisory control and data acquisition (SCADA) requirements, and building dimensions.
2. A preliminary design report shall be prepared and submitted to the City Engineer for review by the Utilities Department prior to submittal of final plans for review. This report shall outline the type of equipment and controls proposed, Piping and Instrumentation Diagram (PI&D), and SCADA for the station along with the proposed hydraulics. A final design report prepared by a registered civil engineer licensed in the State of Arizona shall accompany the construction drawings and specifications.

5.7 DISTRIBUTION SYSTEM

5.7.1 General Information

A. The City of Cottonwood requires reclaimed water mains to be installed along the entire length of the property line frontage of that property being developed. The property line frontage is defined as, that portion of a parcel of property that abuts a street, easement, or public rights of way. If a parcel to be developed has more than one frontage, improvements may be required to be installed along all frontages if required flow, system redundancy, water quality or paving issues conflict.

B. Design Policy

1. The City of Cottonwood will require the extension of reclaimed water mains along a frontage, or through a subdivided parcel, to the boundary where future extension of the reclaimed water main is possible, providing a point of service to adjacent properties, or as determined necessary by the City Engineer. Reconstruction of residential or commercial structures requires compliance with all current ordinances and design guidelines relating to reclaimed water main extensions, main sizing, and service lines.

2. The City of Cottonwood maintains two (2) pressure zones and care shall be taken to identify boundary conditions when designing near a zone line. The Engineer of Record shall contact the Utilities Department for verification of reclaimed water pressure zone boundaries. Static and dynamic reclaimed water pressure and flow tests will be performed on flushing devices located on each leg of the existing reclaimed water system between zone boundaries where connections are proposed.

C. Design Standards

1. The Engineer of Record shall design proposed reclaimed water infrastructure in accordance with the design standards listed in the EDSM. These documents contain construction related specifications and details that impact the design of reclaimed water systems including trenching, bedding, backfill and pavement replacement, etc.
2. Reclaimed water system expansion and extension requirements to serve both new and existing development are outlined in the Cottonwood Municipal Code (CMC), Title 14 – City Utilities.

5.7.2 Reclaimed Water Main Pipes & Materials

A. Pipe Sizing

1. The minimum size of a reclaimed water main shall be six (6”) inches in diameter when service is provided from two (2) directions. A minimum eight (8”) inch reclaimed water main shall be required where service is provided from one (1) direction only. Larger size mains shall be provided as necessary to meet all other design criteria, the development’s design report, specific reclaimed water demands, or the City of Cottonwood Reclaimed Water System Master Plan.
2. One (1”) inch, two (2”) inch or three (3”) inch reclaimed water mains are not permitted for new construction as public reclaimed water mains. Four (4”) inch mains may be considered with approval from the City Engineer.

B. Pipe Materials

1. All reclaimed water mains shall be a minimum of Class DR 14 Polyvinyl Chloride (PVC) or 350 (CL350) Ductile Iron Pipe (DIP) cement mortar lined and seal coated.
2. Service connections for meters shall be two (2”) inch minimum, CTS Polyethylene Reclaimed Water Tubing without splices.
3. Design analysis for wall thickness shall be required in cases where pipelines could be subjected to external loads, which exceed the manufacturer’s specifications. These include, but are not limited to, pipelines crossing under storm drain lines greater than thirty six (36”) inches in diameter, pipelines in the roadway alignment that would be exposed to construction vehicle loads prior to paving, and installations exceeding the pipe manufacturer’s maximum depth of bury.
4. All aggregate material within the trench envelope of reclaimed water mains require ph and resistivity testing for determination of the necessity of cathodic protection/polywrap.

Aggregate shall be tested in accordance with procedures of the American Ductile Iron Pipe Research Association. Such tests shall be submitted to the City Engineer prior to construction to determine if cathodic protection/polywrap is required in the design.

5. All reclaimed water piping shall be color coded for easy visual identification. All reclaimed water system components shall be integrally colored utilizing reclaimed purple as the color, no exceptions.

5.7.3 System Layout

A. To provide appropriate reclaimed water pressure, reclaimed water circulation and redundancy, all new reclaimed water mains shall be designed in a looped configuration where feasible, as determined by the City Engineer, providing a minimum of two sources that can be isolated by gate valves, for maximum dead-end line length and size requirements.

B. Reclaimed water mains shall not be located within ten (10') feet of a building or retaining wall.

C. For purposes of horizontal and vertical separation, storm drains, potable and non-potable water systems and sewer service lines shall be treated as sewer mains. A minimum of one (1') foot of separation shall be required pursuant to MAG Standard Details 404-1 and 404-2.

D. Existing reclaimed water main stubs and service lines adjacent to a proposed development that are not used shall be removed. For mains, this includes removing all valves, capping the tee and removing the pipe at the main. For services, this includes removing the saddle and its appurtenances and installing a full circle stainless steel clamp.

E. Main Locations:

1. Public reclaimed water mains and appurtenances are required to be located within dedicated public right of way or easements
2. Horizontal Location: All reclaimed water mains shall be aligned parallel to property lines or street center lines and shall not cross and re-cross the centerline
    a. Reclaimed water mains located beneath streets within the public right of way shall refer to COC Standard Details 1601 thru 1604
    b. Public reclaimed water mains in commercial, multifamily, and industrial developments shall be located under driveways, or drive aisles and a minimum of ten (10') feet from any structure, including overhangs
    c. A minimum twenty (20') foot easement shall be provided and the reclaimed water main shall be located in the center of the reclaimed water main easement
    d. Horizontal alignment changes shall be made with 11 ¼, 22 ½, 45, 90 degree bends. Joint deflection shall not exceed seventy five (75%) percent of the pipe manufactures specification
    e. Horizontal and Vertical locations shall be consistent with COC Standard Details 1601 thru 1606 and MAG Standard Detail 404-1
3. Vertical Location:

a. New reclaimed water mains and reclaimed water service lines are not allowed to pass under detention basins
    i. This does not apply to landscape irrigation lines downstream of proposed backflow prevention devices or buildings
b. Meters, blow-offs and valves shall not be located in washes, detention areas, private driveways, sidewalks, curbs or valley gutters

5.7.4 Dead-End Mains

A. The maximum length for a dead-end reclaimed water distribution main shall be governed by water quality standards and shall be sufficient to provide minimum pressures and flows.
B. Capped dead-end mains shall be fitted with a flushing device per MAG Standard Detail 390, Type "B". Fire hydrants shall not be used as a flushing device. Flushing devices shall not be located in washes, detention areas, retention areas, sidewalks, driveways or paved areas.

5.7.5 Design Flows

A. The ultimate design flow within the City of Cottonwood's reclaimed water distribution system will be based on the City of Cottonwood's current reclaimed water master plan. Reclaimed water demand for each development will be calculated using the average day demands with appropriate peaking factors applied to ensure that the existing distribution supply is sufficient. Designs will include all necessary improvements, including booster-pumping stations, reservoirs, mains and appurtenances to meet the system's ultimate demand. Design flow C factors shall be applied using Table 5-1.

TABLE 5-1: C-FACTORS

DIAMETER	C-FACTOR
6-inch	90
8- inch	110
10- inch	115
12- inch	120

1. Hydraulic analysis will demonstrate that the system will provide average day and maximum day demand. The average day to maximum day peaking factor is 1.1, and the max day to peak hour factor is 1.5. These factors shall be appropriately increased for parks and other high-demand reclaimed water users.
2. A minimum of twenty (20) psi shall be maintained at the point of maximum demand. Impacts to surrounding areas shall also be considered.
    a. Water velocity criteria under maximum day demand conditions are as follows:
        i. Velocity ≤ 5 feet per second (fps) for pipes < 36 inches diameter (Head loss, HL= 2-7 feet/1,000 feet)
        ii. Velocity ≤ 6 fps for pipes ≥ 36 inches diameter (Head loss, HL=1-2.5 feet/1,000 feet)

3. Design flows for all distribution systems will be based upon flow and pressure of the existing system as documented by the Engineer of Record.
4. Prior to acceptance by the City Engineer, all platted subdivisions will conduct an additional flow test at the flushing devices having the lowest and highest ground elevation within the subdivision.
5. Developments that cross pressure zone boundaries shall conduct a flow test within each pressure zone as outlined above. The results of this test, along with a copy of the final plans, shall be submitted to the City Engineer for review and acceptance.

5.7.7 Pressure Requirements for New Development

A. Pressure extremes in reclaimed water systems result in the potential for contaminants to enter the network. Low pressures in the reclaimed water system may allow polluted fluids to be forced into the system, and high pressures may cause ruptures or breaks in the network.
B. The static pressure in the distribution system shall not exceed one hundred (100) pounds per square inch (psi), and the system shall be designed to maintain a minimum residual pressure of fifty (50) psi at the point of service (box and setter or meter) to be served by system pressure at maximum day demand conditions. The system will be designed to maintain twenty (20) psi minimum pressure under design maximum day requirements. The twenty (20) psi minimum pressure design requirement accounts for the safety factor included in conservative "C" factors to account for aging infrastructure and flexibility in locating pressure zone boundaries.
C. All distribution reclaimed water mains, appurtenances and service lines will be designed for a minimum normal internal working pressure of one hundred fifty (150) psi.
D. Provisions shall be made to protect the system from water hammer pressures. The occurrence and severity of water hammer can be reduced by using pressure-release valves, surge tanks, variable frequency drives, soft start motor controllers and air chambers. In cases where pressures exceed one hundred (100) psi or water hammer conditions are developed, all elements of the system shall be designed accordingly.

5.7.8 Pressure Reducing Valves (PRV's)

A. Approximate pressure zone boundaries and their respective elevations are shown in the City of Cottonwood's reclaimed water model. Within the distribution system, or to interconnect to other zones, PRV's shall be required to maintain pressure zones within the distribution system or to interconnect to other zones. Distribution systems will not be designed to operate at pressures in excess of one hundred (100) psi. PRV's shall be built in accordance with COC Standard Detail 1323. A minimum of one (1) PRV in each pressure zone will be designed with a high-pressure relief valve.
B. Vaults shall be located outside of paved areas adjacent to the back of curb or sidewalk. PRV's shall be located within the rights of way, an easement, or an easement within a private street tract, and shall be provided with unobstructed vehicular access, including parking. Curbs adjacent to PRV vaults shall be Type C or Type D in accordance with COC Standard Detail 1220-1, unless other access is provided

that is acceptable to the City. Site grading shall route stormwater and discharge water from relief valves away from the vault. Site design shall consider and mitigate any impacts of discharge water on downstream improvements. The location of pressure relief risers shall be shown on the final plans.

C. The Engineer of Record shall specify in the design report and on final plans, the size of the main and low flow pressure reducing valves, the upstream system pressure, and the design downstream pressure setting.

D. The City of Cottonwood requires the installation of isolation valves on all PRV stations to facilitate the operation, maintenance, and expansion of the reclaimed water distribution system.

5.7.9 Valves

A. The City of Cottonwood requires the installation of isolation valves to facilitate the operation, maintenance, and expansion of the reclaimed water distribution system. Reclaimed water main valves shall meet or exceed the pressure classification of the reclaimed water main.

B. Gate valves, required to control the operation of the reclaimed water system, shall be installed per MAG Standard Detail 301.

C. All valves shall be resilient seat/wedge gate valves, epoxy-coated inside per the American Water Works Association (AWWA) C-550 per MAG Specification 630.3.

5.7.10 Fittings

A. Joint deflection shall be discouraged, but where evaluated and allowed for, specific conditions shall not exceed seventy five (75%) percent of the pipe manufactures specification. Fittings may be required where more than two (2) pipe lengths are deflected.

B. A minimum distance between fittings shall be specified on the final plans for constructability. All fittings shall be identified on both the plan and profile view with station and elevations. The Engineer of Record is responsible for verifying the minimum distance necessary for the type and diameter of pipe and related fittings specified for the project.

5.7.11 Valve Locations

A. Shutoff valves shall be installed on reclaimed water mains at locations within the distribution system that allow sections of the system to be taken out of service for repairs or maintenance without significantly curtailing service in other areas. A sufficient number of valves shall be provided on reclaimed water mains so that inconvenience and sanitary hazards will be minimized during repairs. Valves will be located such that closing no more than four (4) valves can isolate any section of the system.

B. Valve Location

    1. A valve shall be located on each side of a vertical alignment per COC Standard Detail 1370, creek, wash, railroad, or highway crossing.
    2. Valves shall not be located in curbs, sidewalks, driveways, valley gutters, bike lanes, and vehicle wheel paths.

3. The preferred locations of valves shall be set at the intersecting street adjacent to other valves.

C. Spacing
   1. Maximum spacing of reclaimed water distribution main valves shall be as follows:
      a. In Commercial, multi-family, and industrial areas, valve spacing will not exceed five hundred (500') foot intervals
      b. In single family residential, valve spacing cannot exceed eight hundred (800') foot intervals or one (1) per block, whichever is less

D. Install all tees with a valve on the lateral main, so that the lateral can be taken out of service without interrupting the supply to other locations. At intersections of distribution mains, valves shall be required on each leg.

E. All valves require valve boxes installed per COC Standard Detail 1502. The valve box shall be square and integrally colored (reclaimed purple) for visual identification, no exceptions. All valves shall be installed with a debris cap. The debris cap handle shall be the appropriate color to indicate valve type. Refer to COC Standard Detail 1391.

F. All valve frame and cover adjustments will be per COC Standard Detail 1391.

5.7.12 Air Release Valves

A. Air release valves shall be installed at all local high points of reclaimed water mains four (4") inches or larger in diameter, as follows:
   1. When reclaimed water main changes from a positive slope to a zero slope or a negative slope
   2. Vertical alignment changes that cross under or over another facility, such as other utilities, drainage washes, etc.
   3. All air release valves shall be per COC Standard Detail 1317 or 1322, as applicable for size

5.7.13 Thrust Restraint

A. Thrust blocks shall not be allowed for new construction on the City of Cottonwood's reclaimed water system unless approved in writing by the City Engineer. Thrust restraint shall be met by:
   1. Welded joints in steel pipelines
   2. Mechanical joints in Ductile Iron Pipelines
   3. Locking gasket and ring systems acceptable to the City Engineer

B. All valves shall be considered dead ends for thrust restraint.

C. COC Standard Details 1303-1 and 1303-2 include acceptable means of joint restraint for both horizontal and vertical deflections. Vertical slopes that exceed twenty (20%) percent require restrained joints, slopes exceeding twenty five (25%) percent require additional anchoring, in addition to restrained joints, to prevent pipe movement and minimize settling. The Engineer of Record shall verify the reclaimed water pressures and earth bearing pressures assumed by the details. Where joint restraint is not proposed, per COC Standard Details 1303-1 and 1303-2, the Engineer of Record shall

submit joint restraint analysis with the plans for review and comments. All restrained pipe lengths shall be specified on the plans, or referenced to a COC Standard Detail.

D. Couplings, Joints, Gaskets, and Flanges
    1. Couplings, joints, gaskets, and flanges shall conform to Section 610.10 of the MAG Uniform Standard Specifications or equal, unless otherwise approved.
        a. Thrust Restraint: Joint restraint shall be used at all bends, elbows, tees, crosses, dead ends, stubs, curb stops, taps, and valve locations on reclaimed water mains where reclaimed water flow changes direction or is stopped. The joint restraint limits shall be shown on the plan and profile view. Restrained joint analysis shall be prepared and submitted when necessary keeping in mind that concrete thrust blocks are not to be considered in the analysis.
        b. Acceptable restrained joint systems include the following Manufactures:
           EBAA Iron Inc.
           Ford Meter Box Company Inc.
           Romac Industries
           Tyler Union
           US Pipe
        c. Ductile Iron Pipe (DIP) joint restraint shall comply with COC Standard Details 1303-1 and 1303-2.

5.7.14 Electronic Markers

A. Tracer wire shall be placed along all public reclaimed water mains and service connections. All splices of tracer wire shall be Copperhead Snakebite or 3M DBR moisture displacement connectors.
B. A continuity test will be performed at the completion of installation. Passing test results shall be provided for all pipe segments within the Engineer of Record's as-built data and plan set.
C. Trace wire stations shall be required on all mains without sufficient valves and other points necessary to access the wire to maintain accurate signal strength.
D. Maximum distance between test stations shall not exceed five hundred (500') feet. Refer to COC Standard Detail 1319-2.

5.7.15 Pipe Cover

A. Reclaimed water mains shall be installed to minimum and maximum depths measured from the proposed finished grade to top of pipe as follows:
    1. Reclaimed water mains shall have a minimum cover of four (4') feet
    2. Public reclaimed water mains that are installed through undeveloped property (i.e., locations where the final finished grade elevation is not known, particularly along future street alignments), shall have a minimum cover of five (5') feet from the existing grades.
    3. Subsequent fills that produce a cover depth in excess of six (6') feet shall require the main to be vertically realigned within the four to six (4'-6') foot envelope

4. Maximum cover over reclaimed water mains shall be six (6') feet, except at vertical re-alignments necessary to avoid conflicts with other utilities and storm drains

B. If a reclaimed water main is installed within an area to be filled at a later time, adequate pipe protection shall be provided. This may include a temporary berm or constructing the reclaimed water main to a minimum cover below existing grade. The Engineer of Record shall notify the Utilities Department of such occurrences and address them in the design report or master plan and civil plans.

C. Concrete encasement of reclaimed water mains is prohibited to achieve separation from water or sewer.

5.7.16 Wash Crossings

A. All wash crossings will be constructed using restrained joint Class 350 (CL350) Ductile Iron Pipe (DIP). Bury requirements to place reclaimed water mains under washes or channels shall be based upon the scour depth of the 100-year peak design discharge (Q100) in the channel or wash. The minimum depth of bury below the design flow line of the channel or wash shall be per EDSM, Table 6-7, unless site specific geotechnical and hydraulic data is provided.

B. Wash crossings with a one hundred (100) year flow above five hundred (500) cubic feet per second (cfs), shall have the scour depth estimated using Arizona State Standard Attachment SSA 5-96, Guideline 2, Level I, as published by the Arizona Department of Water Resources. The Engineer shall estimate the depth of scour and design the top of pipe to be three (3') feet below the estimated scour depth. The engineer shall provide a detailed analysis of the scour depth with final plans for review and approval.

C. All pipelines that must be located within the scour zone or do not meet the minimum required depth of bury, as indicated above, shall be protected by installing a cut-off wall, and energy dissipation downstream of the pipeline to stabilize the scour depth to a minimum of three (3') feet above the pipeline. The engineer shall design the cut-off wall energy dissipation and include details on the improvement plans. The City Engineer shall review pipe protection and scour stabilization requirements on a case-by-case basis.

5.7.17 Separations & Vertical Realignments

A. For the protection of the public reclaimed water supply from contamination the Engineer of Record shall maintain separation distances in accordance with the Arizona Department of Environmental Quality Engineering Bulletin 10, MAG Specification Section 610.5 and MAG Standard Details 404-1 and 404-2 Water and Sanitary Sewer Separation/Protection.

B. Vertical separation of water, reclaimed water and sanitary sewer mains shall comply with MAG Standard Detail 404-1. Where conditions prevent adequate horizontal and vertical separation:

1. Both the water, reclaimed water and/or sewer main will be constructed of Class 350 (CL 350) Ductile Iron Pipe (DIP) with restrained joints or
2. Where the existing water main is other than restrained ductile iron, the water mains shall be replaced with restrained DIP per MAG Standard Detail 404-2, and/or

3. Where the existing or proposed sewer main is other than restrained Ductile Iron Pipe, the sewer main shall be replaced with Protecto 401 epoxy lined, restrained DIP per MAG Standard Detail 404-2.

C. Separation of reclaimed water from all utilities will conform to COC Standard Detail 1402.

D. Reclaimed water mains crossing over culverts and storm drains shall maintain both a minimum of twenty four (24") inches vertical separation and the minimum depth of bury. If the design cannot provide these clearances, a vertical realignment may be required.

E. Separation from Storm Drains and Culverts: Reclaimed water mains shall maintain four (4') feet horizontal and two (2') feet vertical separations from storm drains and culverts. Reclaimed water mains crossing less than two (2') feet below a storm drain or culvert shall require additional protection such as the use of restrained joint DIP or placing the reclaimed water main in a casing pipe. Air release valves and isolation valves shall be installed per the following:

1. Isolation valves will be installed on each side of the vertical realignment
2. The Utilities Department may consider the location of adjacent valves, and reclaimed water service mains to help minimize valves at vertical realignments
3. Install air release valves at localized high points where air entrapment or cavitation may occur
4. Do not place tees, service lines, and other appurtenances within any portion of the vertical realignment

5.7.18 Service Lines & Meters

A. The reclaimed water service line and meter shall be sized based upon the total daily demands for the development and the recommended maximum capacity. The minimum size service tap, saddle, line and meter set shall be two (2") inch.

B. That portion of the reclaimed water service from the water main up to, and including the brass nipple downstream of the meter is public and shall be maintained by the City of Cottonwood as shown in COC Standard Detail 1503. That portion of the reclaimed water service beginning at the curb stop after the meter is private and shall be maintained by the property owner. Design of the private on-site portion of the reclaimed water service shall comply with the current plumbing code and shall include a customer shutoff and pressure-regulating valve. Refer to COC Standard Detail 1503.

C. Due to the City of Cottonwood's reclaimed water billing rate structure, meter sizes shall not exceed the size of the service. (e.g. a one and one half (1 ½") inch meter shall not be allowed on a one (1") inch service).

D. Service lines are necessary to meet irrigation demands. Residential irrigation connections shall not be allowed to the City of Cottonwood reclaimed water system.

E. Installation of metered two (2") inch reclaimed water services shall be in accordance with COC Standard Detail 1503. Installation of three (3") inch to six (6") inch metered reclaimed water services shall be coordinated and approved by the City Enigneer.

F. Final plans shall show locations of service lines and meters to common areas referenced with stations and dimensions, or offsets, from the street centerline or monument line. Service lines and meter boxes shall be located within a public right of way or a utility easement per COC Standard Detail 1503.

G. Reclaimed water service connections shall be designed perpendicular to the main. Lines shall be continuous from the main to the meter with no splices. Reclaimed water service lines shall have six (6') feet minimum horizontal separation from potable water and sanitary sewer service lines.

H. The Developer shall install all reclaimed water services, meter setter and meter boxes in new development projects.

    1. Reclaimed water meter boxes shall be installed out of traffic areas and behind back of curb and sidewalk. Refer to COC Standard Detail 1503.
    2. Metered Services:
        a. Subdivision plans shall provide a typical reclaimed water service, location detail
        b. Where reclaimed water services are being designed for isolated locations, provide stationing and offset to property line
        c. Minimum reclaimed water service size is two (2") inch with a two (2") inch meter

I. Existing reclaimed water services not used shall be noted on the approved civil plans and the as-built plan as abandoned at the main with full circle stainless steel repair clamp.

5.7.19 Backflow Prevention & Cross Connection Control

A. The installation of Backflow Prevention Assemblies is required for all developments. The following types of service connections shall require backflow prevention to be installed: commercial meters, master metered systems, irrigation meters, construction meters, and multifamily residential meters.

B. Residential use of reclaimed water is prohibited.

C. Every effort shall be made to locate the reclaimed water meter and vault in an area that can accommodate a properly installed backflow assembly. When the location of a backflow preventer cannot be accommodated adjacent to the meter, the designer shall:

    1. Request in writing to separate the backflow assembly from the meter with a detailed explanation why the applicable standard cannot be met as well as the proposed alternative location and measures that will be taken to ensure no taps can be made between the meter and the device
    2. Backfill the reclaimed water line between the meter box and the backflow preventer with 1-sack slurry Controlled Low Strength Material (CLSM) per MAG Section 728. CLSM shall be placed to the full width of the trench and to six (6") inches above top of pipe
    3. Note on the plans that inspection of the reclaimed water piping connecting the meter to the backflow preventer be inspected by a City of Cottonwood prior to CLSM and backfill

5.7.20 Tract & Easement Requirements

A. All public reclaimed water mains and appurtenances located outside of a public right of way or a private street tract with easement overlay shall be placed in the center of a minimum twenty (20') foot

wide easement. The reclaimed water main shall be located a minimum of ten (10') feet from the edge of easement. The easement shall have legal access from a public right of way, shall be free of obstructions, shall not be located in a fenced area, and will be accessible at all times to City of Cottonwood service equipment such as trucks, backhoes, etc. Reclaimed water main easements, located outside of paved areas, shall have a twelve (12') foot wide all weather access road per COC Standard Detail 1607.

B. The City Engineer may require additional easement width if in his opinion excessive laying depth of the pipe would require the additional width for maintenance purposes.

C. Any re-vegetation within the easement shall consist of low growing shrubs or plant material acceptable to the City Engineer. Trees may be located along the edge of the easement but not within ten (10') feet of the reclaimed water main as measured to the trunk of the tree.

ARTICLE 6: WASTEWATER

6.1 INTRODUCTION

6.1.1 Purpose

The purpose of this Article is to provide engineering standards, guidelines, and geometric requirements for the design and construction of the public wastewater collection system and private sewer systems that discharge into the public collection system within the City of Cottonwood. This Article is complimentary and supplemental to the Cottonwood Municipal Code (CMC): Title 13, Public Services, CMC Title 14 – Utilities, Cottonwood Zoning Ordinance (CZO), and all other Articles of the Engineering Design Standards Manual (EDSM). An electronic copy of the Cottonwood Municipal Code can be found on the City of Cottonwood website at www.cottonwoodaz.gov.

6.1.2 Applicability

A. The standards and guidelines of this Article shall apply to the construction and modification of the public wastewater collection system and any private sewer system that discharges into the public collection system. This Article is intended for use in plan design, plan preparation, and the plan review process. The information provided in this Article is not intended to cover all situations that arise, nor may it be a substitute for sound engineering principles and judgment.

B. Developers are required to install all improvements necessary to provide wastewater service to their development. This includes any sanitary sewer main, lift station, force main, manhole, vault or other facilities, and required appurtenances, including the payment of all applicable development fees.

C. Developers shall also adhere to the City of Cottonwood's standards for extension of the City of Cottonwood's wastewater system to newly developed areas, subdivisions and in-fill areas inside the City of Cottonwood's service area in accordance with the City of Cottonwood's Wastewater Collection Model.

6.1.3 Design Standards & Guidelines

A. All public sanitary sewer systems are to be of a gravity flow design, unless other factors dictate the use of a force main and lift station. For lift station and force main requirements, refer to EDSM, Section 6.7.2 (Wastewater Lift Station) and EDSM, Section 6.7.3 (Force Main). Developments that need to construct lift station facilities and force mains shall address the facilities compatibility with the City of Cottonwood's Wastewater Collection Model.

B. New public wastewater improvements shall be designed in accordance with Article 1.

C. A civil engineer registered in the State of Arizona shall analyze, design and seal all proposed wastewater system project plans, reports and specifications that are determined by the City Engineer to have an impact on the wastewater collection system. The effects of peak flow shall be examined to ensure proper sizing and layout of proposed wastewater system facilities, including impacts to existing offsite facilities.

6.1.4 Federal, State & County Regulations

A. Environmental Protection Agency (EPA) Regulations

1. The U.S. Environmental Protection Agency (EPA) requires the City of Cottonwood to develop and implement a program to control discharges that might harm the Publicly Owned Treatment Works (POTW). The program establishes local discharge limits for non-residential users, and provides a permitting process based on the users' discharges and types of businesses.
2. The Environmental Protection Agency (EPA) wastewater flow report (EPA 625/R-00/0008 – Chapter 3), states "great care shall be exercised in predicting wastewater characteristics so as not to accumulate multiple factors of safety that would yield unreasonably high design flows…". Further, "…actual measurement of wastewater flows and quality from a residential dwelling or non-residential establishment always provides the most accurate estimate for sizing and designing…" Therefore, the priority of obtaining water and wastewater design flows is 1) flow measurements from the actual facility, 2) the use of flows from similar facilities in the immediate area, 3) the use of similar flows from similar facilities in other areas and, 4) flow tables.

B. Arizona Department of Environmental Quality (ADEQ) Engineering Bulletin No. 11, "Minimum Requirements for Design, Submission of Plans and Specifications of Sewage Works" published by the Arizona Department of Environmental Quality (ADEQ), and Arizona Administrative Code (AAC), "Title18 - Environmental Quality" (R18-9), contain specific requirements for submittals, approvals, and notifications when extension of a public sanitary sewer main is proposed. Additional information can be found on the ADEQ website at www.adeq.gov/function/permits/index.html.

1. Before a permit is issued for the construction of civil infrastructure, the developer shall submit to the City Engineer, Construction Authorization from ADEQ.
2. Before the City Engineer will issue an Approval to Operate (ATO) and Release from the City of Cottonwood, the developer shall deliver to the City Engineer, a signed Discharge Authorization from ADEQ.

C. Yavapai County Environmental Services Department (YCESD)

1. Before a permit is issued for the construction of civil infrastructure, the developer shall submit to the City Engineer, Construction Authorization from ADEQ through the YCESD delegation.
2. Before the City Engineer will issue an Approval to Operate (ATO) and release from the City of Cottonwood, the developer shall deliver to the City Engineer, a signed Discharge Authorization from ADEQ through the YCESD delegation.

D. City of Cottonwood (COC)

1. Issuance of an Approval to Construct by YCESD or ADEQ does not constitute an approval of plans and reports by the City of Cottonwood. No construction shall commence prior to the City of Cottonwood City Engineer issuing a permit.

2. An as-built submittal is required prior to receiving an Approval to Operate and Release from the City of Cottonwood.

6.2 GENERAL INFORMATION

6.2.1 Availability of Public City Sewer

A. The Engineer of Record shall submit the required forms for ADEQ approval to the Public Works Department.
   1. ADEQ approval is delegated to Yavapai County Environmental Services. Refer to Yavapai County website www.azdeq.gov for further information and applicable forms.

B. Average daily design flows shall be used for the Treatment Capacity Assurance, while appropriate peaking factors per (EDSM) Table 6-4 shall be applied to flows for the Collection Capacity Assurance.

C. In order to prevent the possibility of differing ADEQ and City of Cottonwood approved plans, the City of Cottonwood will **NOT** sign and release the Capacity Assurance Forms until all design and review comments have been resolved. Design and construction scheduling shall account for this requirement. Design issues relative to capacity shall be resolved prior to forms being signed.

6.2.2 Private Wastewater Areas

A. Private wastewater collection providers serve portions of Cottonwood's municipal service area. Placing private sanitary sewer mains within City of Cottonwood rights of way (ROW) shall require a license agreement between the private wastewater company (e.g. LLC or HOA) and the City of Cottonwood.

B. The private wastewater service provider shall review modifications or construction of wastewater systems within their franchise areas. When submitting final plans, the developer shall provide written documentation that the private wastewater service provider has reviewed and approved the sanitary sewer mains within its jurisdiction.

C. The City of Cottonwood shall review all private wastewater systems as part of the plan review process. A note shall be placed on the recorded plat or lot split survey and on the construction drawings stating the sewer collection system is private or public as well as operation and maintenance responsibilities on each specific portion of the system constructed. The plan cover sheet shall include a signature block for responsible party for maintenance.

D. Private wastewater system connections to the City system shall be built to City of Cottonwood standards for public sewer force main discharge as identified in EDSM, Section 6.7.3. Required testing of the system shall be performed after backfill and compaction have been completed.

6.2.3 Private On-Site Systems / Alternative Treatment Facilities

The City of Cottonwood does not issue approval for the installation of on-site treatment and disposal systems (i.e. septic or alternative systems). Approval for on-site systems, in lieu of connection to the City of Cottonwood public sanitary sewer system is reviewed and permitted by Yavapai County Environmental Services Department (YCESD), under Delegation Agreement from, Arizona Department of Environmental Quality (ADEQ). The City

will also review the site plan. The property owner is responsible for the design, permitting, construction, operation, and maintenance of these systems in accordance with all permit conditions.

6.2.4 Private Gravity Mains / Low Pressure Sewer Systems

A. The City of Cottonwood does not own, operate or maintain Low Pressure Sewer (LPS) Systems as these systems are considered private by the City of Cottonwood. For connection of an LPS to the City of Cottonwood system for more than one home, the language from 6.2.4.B.1 is to be added to the project plans, plat, CCR's and the deeds. Formation of a Limited Liability Company (LLC), or other entity approved by the City of Cottonwood Legal Department for perpetual maintenance responsibilities shall be required.

B. Operation, Maintenance and Repair of Common Elements and Units

    1. Operation, Maintenance and Repair of the Private Sewer System. The individual sewer customers are served by private sewer collection systems, located as shown on the final as-built project plans, the operation and maintenance of which are the responsibility of the Wastewater Service Provider (Provider) in perpetuity. The Provider shall pay the cost of all operation, maintenance, repair and replacement, of private systems. These private systems are connected to main lines operated by the City of Cottonwood, as identified on the final approved plans. The City of Cottonwood shall have no obligation or requirement to assist or provide manpower or equipment to perform or supplement any responsibilities pertaining to said private sewer systems, all of which are those of the Provider. The Provider shall provide on a yearly basis the firm, contact name, business phone number and emergency phone number for the private system operator, who shall be certified by the Arizona Department of Environmental Quality at the required level.
    2. Identification of Private Sewer System. All sewer clean out covers associated with the private system, per COC Standard Detail 1270, shall be clearly marked "Private Sewer" with cast lettering on the cover.
    3. Homeowner Responsibilities. Homes within the private LPS area that have sewer ejector pumps shall be owned, operated and maintained by the individual homeowner. The City of Cottonwood shall have no obligation or requirement to assist or provide manpower, equipment or assist the homeowner in said duties.
    4. Arizona Blue Sake Responsibilities. The Provider shall, as the owner of underground facilities and as required by State law, join and maintain membership in the Arizona Blue Stake Association at a membership level determined by the Blue Stake Association, with all the rights and obligations set forth by law.

C. Acceptance of Private Sewer Systems for City of Cottonwood Ownership, Operation, and Maintenance. The legal entity shall not petition the City of Cottonwood to accept the private system or any portion thereof for ownership, operation or maintenance until the systems are reconstructed to meet City of Cottonwood standards in effect at the time of said petition.

6.3 AGREEMENTS

Developers and property owners who install improvements to the public wastewater system may be eligible to request a credit, oversize or reimbursement agreement with the City of Cottonwood allowing for partial reimbursement of costs to design and construct those improvements. Only those system components identified in the City's then current Master Plan shall be eligible for such consideration.

6.4 PLAN SUBMITTAL REQUIREMENTS

A. The improvement plans submitted to the City of Cottonwood for approval shall adhere to professional engineering standards governed by the State of Arizona Board of Technical Registration. Improvement plans shall be complete and shall comply with City of Cottonwood and State Board requirements. Improvement plans that do not meet industry standards, or are incomplete, shall be returned by the City of Cottonwood without review comments and shall be determined to be an inadequate project submittal. Additional plan review fees may be required. Repetitive submittals of non-compliant and inadequate improvement documents may be subject to State of Arizona Board of Technical Registration review.

B. A civil engineer registered in the State of Arizona is required to analyze the wastewater generation from a proposed development while determining the closest and best connection point through discussion with the City Engineer. The Engineer of Record shall also determine its impact on the City of Cottonwood's wastewater collection system. This analysis is required from the development to a point on the downstream system where the engineer can certify compliance with a model previously accepted by the City of Cottonwood. The City of Cottonwood is responsible for analysis of sanitary sewer mains shown in the City of Cottonwood's most recently adopted Water & Wastewater Models.

6.5 WASTEWATER SYSTEM REPORTS

6.5.1 General Information

A. The developments wastewater master plan and design reports provide an analysis of the impact that development will have on the City of Cottonwood's wastewater collection system. These reports are reviewed and accepted by the City Engineer.

B. Analysis of all proposed development determined by the City of Cottonwood to have an impact on the wastewater system shall be performed by a civil engineer, registered in the State of Arizona. The analysis shall include the effects of peak flow to ensure proper sizing and layout of the proposed wastewater system facilities.

C. The objectives of the Wastewater Reports are to determine the development's wastewater generation rate, analyze the hydraulics of the proposed sanitary sewer system to a point of connection within the City of Cottonwood's Wastewater System Model and demonstrate conformance for each phase of the development with the accepted master plan for that development. All reports submitted to the City of Cottonwood for review shall be prepared in accordance with the following guidelines:

    1. Format:

        a. The report shall be on letter sized paper (8 ½" x 11")

b. All reports shall have a table of contents
c. Maps and other supporting materials larger than folded ledger size paper (11” x 17”) shall be placed into sleeves as an appendix to the report
d. A civil engineer licensed to practice in the State of Arizona shall seal each report
e. The project name shall be located on the cover
f. The name, address, and phone number of the developer/owner and engineer shall be on the cover
g. The original submittal date and all subsequent revision dates shall be located on the cover
h. Common spreadsheet formats shall be compatible with MS Excel

2. Existing Conditions:
    a. Provide a site description, size, addresses, major streets, township, range and section, relationship to other developments or significant sewer features
    b. State the existing zoning and land use
    c. Describe the existing, topography, and landform features
    d. Describe the existing wastewater collection system infrastructure affected by the development. Identify lift stations and downstream trunk mains that will be used to convey wastewater from the development
    e. Reference any existing master plan(s) or design report(s), applicable from adjacent development. Include excerpts from existing plans or reports, as applicable
3. Proposed Conditions:
    a. Summarize the proposed development, including project name, size and type of development. Include a site plan that indicates the layout of the proposed development with a survey one hundred (100’) feet beyond the project limits
    b. Describe infrastructure required to convey wastewater from the development to the wastewater treatment plant. Show all proposed connection(s) to the City of Cottonwood’s wastewater system. Show extension of sanitary sewer mains into and within the site
    c. Summarize the ADEQ and/or City of Cottonwood’s design standard requirements that were applied to this project
    d. Address ownership, operation and maintenance responsibilities of the proposed wastewater system
    e. Design Methodology
        i. Sanitary sewer main design shall provide gravity collection and buildout flows from the ultimate service area and shall allow for future extension of service to adjacent parcels when possible
        ii. Modeling – Identify the software used and specific assumptions in the model
        iii. Wastewater Flows – Identify land use, population, population density, loads and peaking factors

iv. Collection System Network – Identify and describe mains that will be required to serve the development

v. Lift Stations

1. Describe temporary and/or permanent lift stations where required
2. Provide design parameters, and layouts when appropriate
3. Lift stations shall be designed in accordance with City standards for materials, equipment, communication and backup power

vi. Outfalls – Identify and describe location and size

f. Wastewater Model and Results

i. Identify main sizes, slopes, and other results as obtained from the model

ii. Include a map of the collection system for each simulation where pipes are color coded or appropriately labeled

iii. Any interim areas that do not have sufficient self-cleansing velocity and may require additional maintenance activities until build out shall be clearly identified

g. Table summarizing parcels, acreages, land use, and population

4. Mapping & Exhibits:

a. All mapping shall conform to City of Cottonwood adopted CADD standards and the EDSM, Article 9

b. The project name shall be located on each sheet

c. The name, address, and phone number of the Engineer of Record shall be stated on each sheet

d. The original submittal date and all subsequent revision dates shall be located on the cover

e. All maps shall be to scale

f. Include a vicinity map identifying the projects location with respect to major cross streets

g. All proposed or existing on-site and off-site facilities, including, but not limited to, wastewater mains, lift stations, manholes, etc.

h. All proposed or existing street locations, parcel boundaries, and proposed lots within each parcel. Show dimension and label clearly all property lines, rights-of-way, tracts and easement lines

i. Contour lines, shall have a maximum of two (2’) foot intervals and ten (10’) foot labels

j. Graphics shall present existing utilities as dashed lines and proposed utilities as bold solid lines

k. Screen existing topography into the background. Clearly label existing and proposed contour lines at ten (10’) foot intervals. Show sufficient information to evaluate pipe cover.

6.5.2 Wastewater Master Plan Report Content

A. A wastewater master plan is required when phased construction is proposed or if required by the City Engineer. The Wastewater System Master plan shall show compliance with the City of Cottonwood's design criteria and development policies for each phase of the project and establish a skeletal system for the phased development of a master planned project.

B. The Wastewater Master Plan Report shall specify the terms and requirements for wastewater service to the development.

C. All development projects shall be responsible for determining their specific wastewater discharge and shall include buildout flows from any upstream developments to ensure the system is designed properly.

D. If the proposed development contemplates a change in the original master plan or zoning, which increases density or increases wastewater system flows different from the City of Cottonwood's existing Wastewater System Master Plan, then additional downstream analysis shall be required.

E. Flows shall be calculated according to the hierarchy established in the EDSM, Section 6.1.4.A.2.

F. Along with the model report, a computer disk containing all analysis and modeling shall be submitted along with the model report if the project is determined to be of sufficient complexity and compatible with EPA-NET model software.

G. Each Model map shall show the following:

    1. All proposed on-site and off-site facilities including, but not limited to, lift stations, trunk mains and service connections and laterals
    2. Proposed street locations, parcel boundaries and proposed lots within each parcel
    3. Contour lines, with a maximum of two (2') foot intervals
    4. A separate area location map showing existing and proposed streets, as well as existing parcels surrounding the project to a distance of one (1) mile from the exterior boundaries of the project
    5. A scale that is sufficient to show all required information clearly

H. The City of Cottonwood requires wastewater mains to be installed along the entire length of the property line frontage of the property being developed. The property line frontage is defined as that portion of a parcel of property that abuts a street, easement, or public rights of way. If a parcel to be developed has more than one frontage, improvements shall be installed along all frontages where future connectivity is possible.

I. A construction phase matrix shall be included in a table format for all wastewater related infrastructure required to serve the development. The table shall include each phase, parcel, and each system component. A mark in each box shall specify when infrastructure is anticipated to be required, for each phase of the development.

J. The master plan report shall comply with the adopted City of Cottonwood Wastewater System Master Plan encompassing the respective area.

6.5.3 Wastewater Design Report Content

A. All development projects shall be required to provide an analysis of the projects impact on the City of Cottonwood wastewater system. If the project involves a subdivision plat or lot split a preliminary design report is required with submission of the preliminary plat or lot split survey. The final, sewer system design report shall be submitted with the civil plans. The civil plans shall not be approved until the sewer system design report has been approved.

B. The report shall determine the development's wastewater hydraulic load, and analyze the hydraulics of the proposed sanitary sewer system and its impact to the City's existing system. Additionally, commercial and industrial developments shall include both hydraulic and concentration loads. The analysis shall include the effects of the peak flow to ensure correct sizing and layout of the new wastewater facilities.

C. Design Documentation
    1. Summarize the proposed development. Include a description based on aliquot parts or reference within a platted development and describe the proposed uses
    2. Include a narrative of which design procedures, policies and methodologies will be incorporated into the design of the proposed wastewater system
    3. Note compliance with the Engineering Design Standards Manual (EDSM) and all other applicable standards and codes on the design report
    4. List the title and version of any software used in the design analysis

D. Analysis
    1. Base wastewater flows in accordance with EDSM, Section 6.4.1.A.2
    2. Verify any variance from the stated design flows with the Utilities Department
    3. Identify wastewater peaking factors and peak flows
    4. Scour analysis if drainage crossings are required
    5. Gravity Main
    6. Force Main
    7. Lift Station
    8. Appurtenances
    9. Summary Tables

E. Wastewater modeling results with exhibits shall be included.

6.5.4 Sewer System Model Analysis

A. Provide a model of the planned wastewater system as delineated in this section of this manual. This modeling shall be required where new wastewater infrastructure is being added to the existing City of Cottonwood system. The model shall be provided in a format compatible with the City of Cottonwood's master model and verify flows in the City of Cottonwood system. Minor infill projects may not require a model at the discretion of the City Engineer.
    1. Wastewater Model Requirements:

The developer or developer's engineer shall create and utilize a hydraulic model to demonstrate that the proposed infrastructure of the wastewater system is adequate and satisfies the performance criteria. Hydraulic modeling information shall be provided to the City Engineer.

2. Model Software:

   The City of Cottonwood currently uses the H2OMAP Sewer software, which is EPA-NET compatible. All modeling shall be compatible with the City of Cottonwood's software.

3. Hydraulic Model Data:
   a. All final drawings and model data to be submitted to the City shall use the City of Cottonwood EDSM, Article 9 for coordinate system information.
   b. Attributes:
      i. Each physical entity in the model of the proposed development shall require information and attributes as defined below
      ii. Wastewater Collection System
      iii. Gravity Mains – Diameter, material, length, Manning's coefficient, location, connectivity with mains and manholes, upstream invert elevation, and downstream invert elevation
      iv. Manholes – Diameter, location, manhole losses (minimum one tenth (0.1) foot) drop connecting mains, drop manhole details, wastewater load, and invert elevations
      v. Lift Stations – Layout, location, and connectivity with other entities, number of pumps, pump curve, , pump start/stop controls, rim elevation, wet well dimensions, wet well invert, outfall location and elevation
      vi. Force Mains – Diameter, material, length, Manning's coefficient, location, connectivity and manholes, upstream invert elevation, and downstream invert elevation
      vii. Diversion Structures – Diameter, invert elevation, location, connectivity, weir height and size, control scheme, desired flow through each diversion
      viii. Outfalls – Location, connectivity, invert elevation
4. Hydraulic Evaluation:
   a. New developments shall be modeled to determine if the proposed infrastructure is adequate to service the development and provide the level of service as defined by the City of Cottonwood's performance criteria. Refer to Table 6-1.
   b. The City Engineer will use the City of Cottonwood's model to determine the available capacity in the City's existing downstream sewer collection system to convey wastewater from the development per the design engineer's proposal. The developer will model proposed collector mains and will be responsible to make certain that wastewater can be safely conveyed from the points of origin to the City

of Cottonwood's trunk mains. Off-site improvements to the collection system and lift stations may be required for safe conveyance.

c. Boundary conditions that represent the interface between the development and the rest of the collection system need to be identified and any deficiencies made clear.

d. All improvements required to provide sufficient capacity for project flows shall be identified.

e. Steady-state simulations shall be completed utilizing dry weather average day flow multiplied by the appropriate upstream population peaking factor plus ten (10%) percent Inflow and Infiltration (I&I) factor for new construction. Design documentation shall show that the collection system mains are sized adequately and that slopes are greater than the minimum slope to maintain self-cleansing velocities.

TABLE 6-1: DESIGN CRITERIA

CHARACTERISTIC	PARAMETER
Gravity Mains	2 fps ≤ v ≤ 10 fps
Force Mains	3 fps ≤ v ≤ 7 fps
Flow Depth ,d/D	
d/D for New Sewer Mains with Diameters less than 12-inches	= 0.50
d/D for New Sewer Mains with Diameters greater than or equal to 12-inches	= 0.75
d/D for Evaluating Existing Mains in Developed Areas	= 0.90
Head Loss in Existing Mains	
Gravity Mains	Manning's N = 0.013
Force Mains	Hazen William's C – 120 max
Changes in Main Size	
When a Smaller Main joins a Larger Main	Match Crowns
Head Loss at Manholes	
Manholes with Mains Intersecting at 90° or Greater	Provide a Minimum of 0.1' Invert Drop

6.6 WASTWATER DESIGN FLOWS

6.6.1 Wastewater Collection Analysis

This section shall describe the measurement standards for gravity sewer mains that are to be used to evaluate the suitability of wastewater collection system improvements and additions.

6.6.2 Wastewater System Loads

A. All projects shall provide a summary of the anticipated sewer loads for the project. Provide an analysis of the anticipated sewer flows. This analysis shall be based on actual flows from similar facilities or the hierarchy established in EDSM, Section 6.4.1.A.2. If flows are unavailable from similar facilities the unit factors listed in Table 6-2 shall be used. If the proposed use does not match the tables, provide an estimate of what the flows shall be from other sources and provide a justification for their use. Flows may be calculated on a sub-area basis, but provide a total flow for the entire development as well.

B. Table 6-2 lists unit loads that can be easily correlated to acreages for types of land use. The Arizona Administrative Code also provides guidelines on appropriate unit loads for different types of development that is not easily related to acreages for types of land use.

TABLE 6-2: UNIT DAILY DESIGN FLOWS FOR SEWER (NON-RESIDENTIAL LAND USES)

TYPE OF FACILITY SERVED	APPLICABLE UNIT	WATER DESIGN FLOW PER APPLICABLE UNIT GALLONS PER DAY (GPD)
Airport	Passenger (avg daily number)	4
	Employee	15
Auto Wash	Facility	per Mfg
Bar/Lounge	Seat	30
Barber Shop	Chair	35
Beauty Parlor	Chair	100
Bowling Alley (Snack Bar Only)	Lane	75
Camp		
- Day (No cooking facilities)	Camping Unit	30
- Campground, Overnight,	Camping Unit	75
- Flush Toilets		
- Campground, Overnight,	Camping Unit	150
- Flush Toilets & Shower		
- Campground – Luxury	Person	100 – 150
- Youth (Summer or Seasonal)	Person	50
Church		
- with Kitchen	Person (max attendance)	7
- without Kitchen	Person (max attendance)	5
Country Club	Resident Member	100
	Non-Resident Member	10
Dance Hall	Patron	5
Dental Office	Chair	500
Dog Kennel	Animal (max occupancy)	15
Dwellings	Person	80
Fire Station	Employee	45
Hospital		
- All Flows	Bed	250
- Kitchen Waste Only	Bed	25
- Laundry Waste Only	Bed	40
Hotel/Motel		
- with Kitchen	Bed (2 person)	60
- without Kitchen	Bed (2 person)	50
Industrial Facility		
- with Shower	Employee	35
- without Shower	Employee	25
- Cafeteria (add)	Employee	5
Institutions		
- Resident	Person	75
- Nursing Home	Person	125
- Rest Home	Person	125
Laundry		
- Self Service	Wash Cycle	50
- Commercial	Washing Machine	per Mfg

Office Building	Employee	20
Park (temporary use)		
- Picnic, with Flush Toilets Only	Parking Space	20
- Picnic, with Showers & Flush Toilets	Parking Space	40
- RV – no water or sewer connections	Vehicle Space	75
- RV – with water & sewer connections	Vehicle Space	100
- Mobile Home/Trailer	Space	250
Restaurant/Cafeteria	Employee	20
- With toilet (add)	Customer	7
- Kitchen Waste (add)	Meal	6
- Garbage Disposal (add)	Meal	1
- Cocktail Lounge (add)	Customer	2
- Kitchen Waste Disposal Service (add)	Meal	2
- Restroom, Public	Toilet	200
School		
- Staff & Office	Person	20
- Elementary (add)	Student	15
- Middle & High (add)	Student	20
- with Gym & Showers (add)	Student	5
- with Cafeteria (add)	Student	3
- Boarding, total flow	Person	100
Service Station with Toilets	First Bay	1000
	Each Additional Bay	500
Shopping Center, No Food or Laundry	Square Foot of Retail Space	0.1
Store	Employee	20
Public Restroom (add)	Square Foot of Retail Space	0.1
Swimming Pool, Public	Person	10
Theater		
- Drive-in	Vehicle Space	10
- Indoor	Seat	5

6.6.3 Peaking Factor

A. The peaking factor shall be as defined in the Arizona Administrative Code Section R18-9-E301.D.1.b, and EDSM, Table 6-3.

B. In addition to dry weather peaking factors, ten (10%) percent shall be added for wet weather inflow and infiltration (I&I).

C. Where population estimates are not available or non-residential loads prevail, dry weather peaking factors can be calculated using:

$$PF = C\left(Q_{avg}\right)^{-M}$$

Where:

C = constant (empirical coefficient)

Q_{avg} = average flow rate (ft^3/s, m^3/s)

M = exponent

TABLE 6-3: NON-RESIDENTIAL DRY WEATHER PEAKING FACTORS FOR WASTEWATER COLLECTION SYSTEMS

AVERAGE FLOW CUBIC FEET PER SECOND (cfs)	C	M
$0.012 < Q_{avg}$	1.78	0.16
$0.120 < Q_{avg}$	1.79	0.16
$1.20 < Q_{avg} < 35.0$	1.76	0.05

6.7 INDIVIDUAL WASTEWATER TREATMENT FACILITIES

6.7.1 On-Site Treatment & Disposal Facilities

A. When wastewater service is not available from the City of Cottonwood system, an on-site treatment and disposal system, (septic or alternative system), is required. Permitting is required through the Yavapai County Environmental Services Department (YCESD) for all on-site treatment.

B. The property owner is responsible for the design, construction, operation and maintenance of septic systems/on-site wastewater treatment and disposal facilities. The City of Cottonwood shall not accept any type of on-site system for operation and maintenance, but may provide input to the YCESD regarding environmental concerns.

C. All on-site wastewater treatment and disposal facilities shall be designed, constructed and maintained by the property owner compliant with the applicable requirements of YCESD.

6.7.2 Wastewater Lift Stations

A. When lift stations are contemplated, the Engineer of Record shall meet with the City Engineer to discuss development options and design requirements.

   1. Site selection for wastewater lift stations shall consider accessibility, drainage patterns, visual and neighborhood impact, three-phase power availability, function and design constraints.
   2. The potential for flooding shall be considered when selecting a wastewater lift station location. The station's equipment, vaults and manholes shall be protected from damage and remain operable during a one hundred (100) year flood.
   3. Each tract or lot used for lift station facilities shall include all weather ingress/egress, as shown on COC Standard Detail 1607.
   4. Wastewater facilities shall be located on a tract or lot dedicated to the City of Cottonwood (conveyed by a general warranty deed) and accompanied by a title policy accepted by the City of Cottonwood.

B. Lift Station Requirements

   1. Arizona Administrative Code, Title 18, Chapter 9, "Water Pollution Control," and ADEQ, Bulletin 11 contain minimum requirements for a wastewater lift station. Additional requirements specific to the City of Cottonwood (including but not limited to wet well coating, SCADA, Electrical, pump preferences, etc.) shall be obtained from the City Engineer before beginning design. At a minimum telemetry, pump and wet well redundancy, backup power supply, three-phase power, odor control and security perimeter walls shall be required. The

site shall be large enough to fully contain all the facilities and service equipment for repairs and maintenance.

2. A preliminary design report shall be prepared and submitted to the City Engineer for review with the preliminary plat. The preliminary report shall outline the type of equipment and controls proposed for the station, that meets the City of Cottonwood equipment standards.
3. A final design report prepared by a registered professional engineer, licensed in the State of Arizona, shall accompany all lift station design drawings and specifications submitted to the City of Cottonwood for review with the final plat.

C. Lift Station Design

1. In addition to State requirements lift stations shall be sized per the following:
    a. The wet well shall be sized so that the number of duty pump starts per hour does not exceed three (3) during max day flows, including Inflow & Infiltration (I&I)
2. Design for current, interim and ultimate conditions.
3. Station shall have a minimum of two (2) pumps and be capable of operating at the designed flow with any one pump out of service.
4. The individual pump capabilities shall be identical to facilitate O&M.
5. Pumps shall be submersible or flooded suction dry pit (Flygt, Fairbanks Morse or other approved equal) and shall pass a minimum three (3”) inch sphere or are grinder pumps.
6. Include valve vault with shut-off and check valves.
7. Aeration and odor control:
    a. The Odor Control system (biofilter, biofilter with optional secondary activated carbon polishing unit, or stand-alone activated carbon filter unit will be sized commensurate with hydrogen sulfide concentrations, wet well
    b. The unit must be in a non-corrosive container with a four (4”) inch minimum static air vent or a VFD controlled centrifugal fan installed with a sound attenuation enclosure, as determined by the sizing requirements
    c. Aeration of the wet well shall be required where the retention time exceeds thirty (30) minutes
    d. A compressor with diffuser bar shall be placed in the wet well, with the compressor sized for two (2) standard cubic feet per minute (SCFM) per one thousand (1,000) gallons of wet well storage
    e. The diffuser piping shall be constructed of stainless steel with coarse bubble diffusion and deflector shield
8. Lockable aluminum access covers shall be located directly over the pumps and shall be a minimum of 24” clear of any equipment in order to remove and replace pumps. Aluminum hatches shall include non-corrosive hardware and internal safety netting.
9. Electrical control unit (EG Controls), shall not be located on the wet well or adjacent manholes and shall have separate mounting pad and enclosure.

10. Pre-cast or cast-in-place concrete walls shall be protected against corrosion. All interior walls shall be lined using Sewer Shield 150, Sewer Guard 210S or Raven 405 and installed by a certified installer in accordance with manufacturers specifications.
11. Controls shall have hour meters, cycle meters, magnetic flow meter and run and failure lights with audible alarm and rotating beacon light, hand off auto switches, and provide for alternating sequencing of pumps.
12. All pump rails and hardware shall be stainless steel.
13. A diversion by-pass line and manhole with diversion piping and valves shall be included for routine maintenance and emergency pumping.
14. An emergency power source shall be provided that will supply immediate service and have an automatic transfer switch.
15. Communication to City of Cottonwood's SCADA monitoring system, for operations, monitoring, and security.
16. Equipped with visual or audible alarms when exceedingly high water levels are detected.
17. Level controls shall be avocado style floats, normally open.

6.7.3 Force Mains

A. Force mains shall be located within a public right-of-way, or a utility easement. The main shall be located under pavement where possible.
B. The flow velocity in the force main shall be between three (3') feet and seven (7') feet per second (fps). Force main detention times and the potential for hydrogen sulfide generation shall be calculated for any interim phasing and full project buildout. Parallel mains of differing sizes may be required if interim/startup conditions result in insufficient discharge rates, velocities and excessive retention times.
C. All pipe material used in design of the force mains shall have established ASTM, ANSI, AWWA and NSF standards of manufacture or seals of approval. All pipes shall be designated as pressure sanitary sewer pipe. Acceptable materials shall include epoxy lined Ductile Iron Pipe (DIP) or Polyvinyl Chloride (PVC).
D. Air/vacuum valve(s) and all appurtenances designed for wastewater shall be stainless steel. Air/vacuum valve(s) shall be provided on force mains at all local high points. Refer to COC Standard Detail 1416.
E. Cleanouts and flushing points may be required based on length, flow, and topography.
F. Refer to COC Standard Detail 1426 for details regarding discharge into a manhole from a force main.
G. The separation between the force mains and water and reclaimed water mains shall be six (6') feet exterior wall-to-wall vertically and six (6') feet horizontally. Where a force main crosses above, or less than six (6') feet below a water or reclaimed water main, as identified in MAG 404-1 and MAG 404-2, both the water or reclaimed water main and sewer main shall have additional protection per AAC Title 18, Chapter 5, Section 502(C).
H. Odor control and epoxy lining shall be required at the receiving manhole and shall be sized according to the air volume and pumping. Additional odor control and epoxy lining may be required on

downstream facilities. Acceptable means of odor control include bio-filtration, filtration by media such as activated carbon, Chlorine Dioxide, Permanganate, Alumina or Sulfatreat or other method approved by the City Engineer.

I. A tracer wire shall be attached to the force main as part of the installation per COC Standard Detail 1319-1 and 1319-2.

6.7.4 Flow Metering Structure

A. The Public Works Department may require the installation of a flow metering structure. When required, the engineer shall design the flow metering structure as part of the projects improvements. The flow metering structure design shall include:
   1. Adequate land area for the structure with access to public right of way
   2. Security perimeter fence for site
   3. Locking structure for appurtenances
   4. SCADA radio monitoring system
   5. Electrical control system, to include software
   6. Flow measurement and recording (magnetic or ultrasonic type)
   7. Pipe and conduit penetrations in flow metering structure shall be core drilled. Pipe penetrations shall be sealed with Link Seal
   8. Aluminum access hatches with minimum four (4') feet by six (6') feet clear opening
   9. Fiberglass reinforced polyester grating
   10. All vault interior walls, shall be lined using Sewer Shield 150, Sewer Guard 210S or Raven 405 and installed by a certified installer in accordance with manufacturers specifications

6.8 COLLECTION SYSTEM

6.8.1 General Requirements

A. Property shall be abutting a sewer main for a service connection to be made, unless otherwise allowed pursuant to this section. In cases where the main is not abutting, the main shall be extended at the expense of the property owner before a connection is made.

B. The City of Cottonwood requires sewer mains to be installed along the entire length of the property line frontage of that property being developed, unless constrained by topography. The property line frontage is that portion of the property that abuts a street, public utility easement or public right of way. If a parcel to be developed has more than one property line frontage the City of Cottonwood may require a sanitary sewer main be installed along the entire length of all frontages where parcel development paving is required and future connectivity is possible.

C. Developers shall install, at their expense, all on-site and off-site sewer improvements necessary to serve their developments, including but not limited to gravity mains, force mains, lift stations, and any improvements to existing City facilities to obtain all permits and meet regulatory compliance.

D. All building sanitary sewer service lines shall be privately owned, operated and maintained.

E. Sewer mains installed by improvement projects, which are adjacent to undeveloped parcels, are required to install sewer main stubs from the adjoining manhole(s) to facilitate the future extension of the public sewer system to serve future developments. Stubs from the manholes are to be extended to the right of way line and be eight (8") inches minimum in diameter and finished with a vertical clean-out riser and COC Standard Detail 1270 monument.
F. When required by the City Engineer, users who discharge non-residential wastewater shall install monitoring manholes.
G. Any sewer mains not built to City standards, shall be privately owned, operated, and maintained. Refer to EDSM 6.2 for additional requirements.

6.8.2 Design Policy

A. Reconstruction of residential or commercial structures requires compliance with all current ordinances and design guidelines relating to sewer main extension.
B. For developments where an existing sanitary sewer is not available, a dry sanitary sewer main, shall be installed and tested in conformance to all the design requirements, for a public sanitary sewer main. Use COC Standard Detail 1440-1 or 1440-2, as applicable to locate the ends of service line stubs on a dry system. Design a temporary on-site wastewater treatment system, located such that future connection is possible to the dry system when sanitary sewer service becomes available.
C. Wastewater systems shall be designed to serve the ultimate population density expected in the collection basin. The design shall be in conformance with the current City of Cottonwood approved Wastewater system Model and take into consideration future connections. Where a wastewater collection system extension is possible upstream of a subdivision, extend the sanitary sewer through the subdivision to the platted boundary to a point of connection that shall provide wastewater service to adjacent properties. Regulatory guidelines shall be met in order to provide adequate capacity for upstream flows without future reconstruction.

6.8.3 Design Standards

Wastewater collection systems shall be designed in compliance with the Arizona Administrative Code, Title 18, Chapter 9, "Water Pollution Control", Arizona Department of Environmental Quality (ADEQ), Bulletin 11 and the City of Cottonwood, Engineering Design Standards Manual.

6.9 MATERIALS

6.9.1 Pipe Selection

In selecting pipe material for sanitary sewer mains, consideration shall be given to the chemical characteristics of wastewater, especially industrial wastes. Consider velocity, the possibility of septicity, external and internal pipeline forces and preventing infiltration, abrasion, and similar type problems.

6.9.2 Materials

A. The following types of sanitary sewer mains and force mains may be used:

1. Polyvinyl Chloride (PVC) SDR26, up to fifteen (15”) inches in diameter
2. PVC (meeting ASTM F679-16) between eighteen (18”) and twenty seven (27”) inches in diameter; or
3. Class 350 (CL350) Ductile Iron Pipe (DIP) epoxy coated and seal coated

B. Pipe materials may not change between manholes, unless extra protection is required for utility separation.

C. Trench loading conditions shall be analyzed for each pipe type used. The pipe used, including bedding requirements, shall meet City and manufacturers specifications for each condition.

D. Pipe material used in design shall have established ASTM, ANSI or NSF standards of manufacture or seals of approval, and shall be designated for use with wastewater.

6.9.3 System Layout

A. Public sanitary sewer mains within commercial, industrial or multi-family developments shall be located within drive aisles and a minimum of ten (10’) feet from any structure, including overhead projections. The main shall also be located a minimum of five (5’) feet from any parking stall. Public sanitary sewer mains shall be located within City of Cottonwood right of way or public utility easements. No private services are allowed longitudinally within a public utility easement or City of Cottonwood right of way.

B. If the horizontal direction, slope, material or size of the sanitary sewer main changes, a manhole shall be constructed. The horizontal angle formed between an inlet and outlet pipe shall not be less than ninety (90°) degrees.
   1. Curvilinear sanitary sewer mains shall not be allowed.

C. The design report including water and sewer layouts shall be in accordance with the following criteria:
   1. Sanitary sewer mains and manholes shall be located on the alignment shown in COC Standard Details 1601 thru 1604
   2. Sanitary sewer mains shall maintain a minimum of four (4’) feet horizontal clearance to dry utilities per COC Standard Detail 1402

6.9.4 Design Flows

A. Design flows shall be based on Tables 6-2 and 6-3 in EDSM Section 6.6.3. The priority of obtaining wastewater design flows is 1) flow measurements from the actual facility, 2) the use of flows from similar facilities in the immediate area, 3) the use of similar flows from similar facilities in other areas and, 4) flow tables.

B. Peaking factors in accordance with Table 6-4 shall be used, plus ten (10%) percent inflow and infiltration (I&I).

TABLE 6-4: WASTEWATER FLOW PEAKING FACTOR

UPSTREAM POPULATION	DRY WEATHER PEAKING FACTOR
100	3.62
200	3.14
300	2.90
400	2.74
500	2.64
600	2.56
700	2.50
800	2.46
900	2.42
1,000	2.38
1,001 to 10,000	$PF = (6.330 \times p^{-0.231}) + 1.094$
10,001 to 100,000	$PF = (6.177 \times p^{-0.233}) + 1.128$
More than 100,000	$PF = (4.500 \times p^{-0.174}) + 1.945$
PF = Dry Weather Peaking Factor	**p = Upstream Population**

6.9.5 Hydraulic Design

A. No public sanitary sewer mains shall be less than eight (8”) inches in diameter.

B. Sanitary sewer mains shall be designed and constructed to provide full flow velocities of not less than two and one-half (2.5) feet per second (fps), based upon Manning’s Formula, using an “n” value of thirteen thousandths (0.013).

C. Engineer shall analyze all mains at average day and peak flow and provide velocities as close to two (2) fps as possible (average day). Any velocities under two (2) fps (average day) shall be noted as requiring additional maintenance.

D. To prevent abrasion and erosion of the pipe material, the maximum velocity shall be below ten (10) fps at estimated peak flow. Where velocities exceed ten (10) feet per second (fps), the main shall be constructed of a pipe material that is abrasion resistant. In no case shall velocities greater than fifteen (15) fps be allowed.

E. The sanitary sewer system shall be designed to achieve uniform flow velocities through consistent slopes between manholes.

F. Minimum slopes shall comply with Table 6-5 and shall ensure a minimum self-cleaning velocity of two and one half (2.5’) fps when flowing full.

TABLE 6-5: MINIMUM DESIGN SLOPES FOR CIRCULAR PIPES

PIPE SIZE (INCHES)	MINIMUM SLOPE [1] (FT/FT)
8	0.0050 [4]
10	0.0025
12	0.0020
14	0.0016
15	0.0015
16	0.0014
18	0.0012
20	0.0010
21	0.0010
24	0.0008

Note:

(1) Mains larger than twenty four (24") inches shall still have a slope no less than eight ten thousandths (0.0008)

(2) Pipe capacity presented based on full capacity flow

(3) Table assumes Manning's N value of thirteen thousandths (0.013)

(4) Minimum slope for an 8" pipe shall be 0.0050 ft/ft unless specifically evaluated and approved by the City Engineer

G. Analyze junction losses and include in design report.

H. The depth to diameter (d/D) ratio for gravity sanitary sewer mains ten (10") inches in diameter and less shall be no greater than five tenths (0.50) in the ultimate peak flow condition. The d/D ratio for sewer mains greater than ten (10") inches diameter shall be no greater than seventy five hundredths (0.75) for the ultimate peak flow condition.

I. Each reach of pipe shall be analyzed for design flow (average day), peak flow, and full flow conditions and placed in a tabular form in the design report. The table shall include average, peak, and full flows, the corresponding velocities, flow depth, and flow depth/diameter ratios for each flow regime.

J. The City may require that the wastewater design report include an analysis of the potential of the generation of hydrogen sulfide per EPA guidelines and if so, the design shall provide mitigation.

6.9.6 Manholes & Cleanouts

A. Manholes in City of Cottonwood streets shall be located in accordance with COC Standard Details 1601 thru 1604. Manholes shall not be located in trails, sidewalks, crosswalks crossings, valley gutter, and curb and gutter. Manholes are required at all changes of grade, pipe size, pipe material or alignment and at distances not to exceed those shown below:

TABLE 6-6: MANHOLE SPACING

PIPE SIZE (INCHES)	MAXIMUM SPACING (FEET)
8 to 10	400
12 to 18	500
Larger than 18	600

B. All manhole sections and cones shall be pre-cast concrete as detailed in the COC Standard Detail 1420. Manhole bases can be precast or poured in place.

C. Manhole covers shall be in accordance with COC Standard Detail 1423-1 or 1423-2 as required, for applicable size.

D. Manholes shall be lined or coated at the junction of a force main, at all drop manholes, on sanitary sewer mains fifteen (15") inches in diameter or larger or in other design situations where corrosive conditions are anticipated. Manholes downstream from force mains and private ejector lines shall be evaluated for hydrogen sulfide and shall be lined if warranted. Manholes requiring linings or coatings shall be noted on the final plans.

E. The upstream pipe shall be the same or smaller diameter than the downstream pipe. Inverts through manholes and junction boxes shall be designed to maintain the energy gradient across the structure. Manholes and junction boxes having sewer mains intersecting at 45 to 90 degrees shall have a minimum of 0.10 foot drop across the structure.

F. The manhole shall have a minimum one-tenth (0.10) foot drop across the trough. Inverts at junctions shall be designed to maintain the energy gradient across the junction and prevent backflow. Where pipe size increases, through a manhole, pipe crowns shall be matched on each side.

G. The difference in invert elevations between inflow and outflow mains shall not exceed two (2') feet, unless a drop connection is installed. If less than two (2') feet, COC Standard Detail 1427 shall be used. Drop connections shall be in accordance with COC Standard Detail 1426 and per manufacturer recommendation.

H. Existing manholes shall be replaced to accept new mainline connections unless a drop inlet is designed.

I. Manholes shall be protected from storm drainage and flooding conditions. Sanitary sewer mains shall not be permitted in washes or drainage areas unless otherwise approved in writing, by the City Engineer.

    1. When approved by the City Engineer:

        a. Manholes located within washes or drainage areas shall have bolted watertight covers, bases and barrels to prevent inflow.

        b. The rim elevation shall be a minimum of twelve (12") inches and a maximum of eighteen (18") inches above adjacent finish grade. Refer to COC Standard Detail 1420-2

        c. Provide structural protection against scour from a one hundred (100) year storm event

d. The manhole shall be designed to structurally, exceed the external forces acting upon the manhole from a one hundred (100) year storm event
e. Manholes shall be verified as non-buoyant, or provisions provided to negate the effects of buoyancy

2. Ingress/egress and maintenance roads shall be provided for all public sewer mains and appurtenances. Maintenance roads shall be in accordance with COC Standard Detail 1607

J. Cleanouts per COC Standard Detail 1441 may be used in place of manholes at the end of mains that 1) cannot be extended, 2) are less than one hundred fifty (150') feet in length, and 3) have less than four (4) service connections.

1. Service connections are not allowed at the ends of main line cleanouts. Service connections shall be provided off the sanitary sewer main a minimum of two (2') feet downstream of the cleanout.

6.9.7 Pretreatment Monitoring Vaults & Manholes

A. The City Engineer has the sole discretion of when the installation of a monitoring vault and or sample collection point will be required for non-residential discharges. The following conditions will automatically trigger monitoring point and or sample collection point requirements:

1. The projected process wastewater discharge is equal to or greater than twenty five thousand gallons per day (25,000 gpd)
2. The projected operation falls under Federal Categorical Classification under 40 CFR Parts 400 – 471
3. The projected operation is otherwise classified by the City Engineer, the Arizona Department of Environmental Quality (AZDEQ), or the US Environmental Protection Agency (EPA) as a Significant Industrial User (SIU)
4. The projected operation is classified as a Food Service Facility (FSF) or Vehicle Service Facility (VSF) by the City Engineer
5. Any other discharger regulated under the City's pretreatment program

B. Any developments that meet the criteria in 6.9.7.A. are required to install a monitoring vault and sample collection in accordance with the following provisions:

1. Monitoring vaults shall be constructed with a straight channel and no taps or bends for ten (10') feet upstream or downstream or as approved by the City Engineer. Design details for monitoring vaults
2. Monitoring vaults shall be located and designed for access at all times by monitoring crews and vehicles
3. Monitoring vaults shall be installed as to prevent inflow from surface runoff

C. New developments that are classified as food service facilities (FSF) or vehicle service facilities (VSF) by the City Engineer are required to install a sample collection point that meets the following conditions:

1. The sampling point shall be of sufficient size to allow full access to an opening equal to the inside diameter of the drainpipe
2. The sampling point shall be accessible to City of Cottonwood staff during regular working hours
3. The sampling point shall be installed as to prevent inflow from surface runoff
4. The sampling point shall be installed immediately downstream of the sand/oil (SO) separator or grease interceptor (GI) and prior to any downstream connection

6.9.8 Pipe Cover & Separation

A. Sanitary sewer main should be installed, when possible, at a depth sufficient to promote gravity drainage of wastewater from each service line and shall anticipate the lowest potential finish floor elevation for each building pad to the maximum extent possible. The depth shall include the additional height required for service tap placement at the ten (10) o'clock or two (2) o'clock position and an anticipated minimum slope of one quarter (¼") inch per foot. The service lateral shall pass below water mains and other utilities where possible and shall not steeply rise within the right of way.
    1. In no case shall a sanitary sewer main be installed with less than four (4') feet of cover over the top of the pipe, unless otherwise approved by the City Engineer.
    2. All sanitary sewer mains and laterals shall be designed to resist superimposed live loads and backfill overburden without damage or deflection to the pipe material and without adversely affecting the hydraulic characteristics of the pipe. The engineer shall specify minimum depths of cover to be provided during the construction of roadways or other facilities affecting cover over the main and laterals.

B. Caution shall be taken in the design and construction of the sanitary sewer mains to protect all water supplies from wastewater contamination. To minimize the potential of contamination, the Engineer of Record shall design the horizontal and vertical separation of water, reclaimed water and sanitary sewer mains in accordance with Engineering Bulletin No. 10 "Guidelines for the Construction of Water Systems" published by the Arizona Department of Environmental Quality and the Arizona Administrative Code, Title 18, Chapter 5, "Environmental Reviews and Certification".
    1. The minimum horizontal distance from a water or reclaimed water main to a sanitary sewer main shall be six (6') feet, outside to outside. The minimum vertical clearance shall meet COC Standard Detail 1404-1 and 1404-2. Concrete encasement, shall not be substituted, for extra protection.
    2. Both the water and sewer main shall be constructed of Class 350 (CL350) Ductile Iron Pipe (DIP) with restrained joints.

C. Sanitary sewer mains shall have a minimum of ten (10') feet of horizontal clearance from any structural footing or substantial improvement. Design shall consider any structural load imposed on the pipe.

D. For information about separation from other utilities, see COC Standard Detail 1402.

E. Sanitary sewer mains crossing less than two (2') feet below a storm drain culvert shall require the additional protection of controlled low strength material (i.e. one sack slurry). Sanitary sewer mains

crossing below large structures such as box culverts and bridges, shall require casing pipe, be fully restrained, and have scour protection. Sanitary sewer mains crossing over storm drains and culverts shall be a minimum of one (1') foot above and be adequately protected from freezing, and additional structural load.

6.9.9 Wash Crossings

A. All wash crossings shall be constructed using restrained joint epoxy coated, Class 350 (CL350) Ductile Iron Pipe (DIP). Bury requirements to place sanitary sewer mains under washes or channels shall be based upon the one hundred (100) year peak design discharge (Q100) in the channel or wash. The minimum depth of bury below the design flow line of the channel or wash shall be shown in Table 6-7, unless site-specific geotechnical and hydraulic analyses are performed to document any reduction.

TABLE 6-7: BURY REQUIREMENTS FOR WASHES

100 YEAR FLOW RATE (cfs)	MINIMUM DEPTH OF BURY (FEET)
1 to 49	5
50 to 99	6
100 to 499	7
Greater than 499	Scour depth based on scour analysis required

B. Wash crossings with a one hundred (100) year flow above five hundred (500) cubic feet per second (cfs), shall have the scour depth estimated using Arizona State Standard Attachment SSA 5-96, Guideline 2, Level I, as published by the Arizona Department of Water Resources. The engineer shall estimate the depth of scour and design the top of pipe to be three (3') feet below the estimated scour depth. The engineer shall provide a detailed analysis of the scour depth with final plans for review and approval.

C. All pipelines that must be located within the scour zone or do not meet the minimum required depth of bury, as indicated above, shall be protected by installing a cut-off wall, and energy dissipation downstream of the pipeline to stabilize the scour depth to a minimum of three (3') feet above the pipeline. The engineer shall design the cut-off wall, energy dissipation, and include details on the improvement plans. The City Engineer shall review pipe protection and scour stabilization requirements on a case-by-case basis.

6.9.10 Gravity Sanitary Sewer Service Connections

A. The engineer shall make every effort to use existing sanitary sewer service connections that have been extended to a property through a "stub out" by previous construction. Where the use of a stub out is not feasible, the existing line shall be abandoned at the sanitary sewer main by installing a glued cap at the wye. Service connections will not be allowed directly into a manhole.

B. Minimum diameter for a service connection is four (4") inch inside diameter (ID).

C. All service line connections shall be installed perpendicular to the sanitary sewer main in accordance with COC Standard Detail 1440-1 and 1440-2. In addition, service line connections shall be extended to the back of the right of way or public utility easement. No horizontal bends in the service line will be allowed.

D. Location

1. All proposed service line connections shall be shown on the final plans with stations and dimensions or offsets, from street centerline.
    a. Each lot or building shall be provided with its own individual service line unless exempt under the Cottonwood Municipal Code.
    b. Future lot splitting will require a separate service line connection for each lot created.
2. The service line location shall be coordinated to avoid conflicts with other utilities and driveway locations. Locations shall be on the lower elevation side of the lot, whenever possible.
3. A two (2') foot minimum separation between service taps is required.
4. Sanitary sewer lines shall be designed to allow the sanitary sewer service lines to pass under water mains with twenty four (24") inches of vertical clearance to minimize potential health hazards.
5. When minimum separation is not possible or the sanitary sewer service line passes over the water or reclaimed water main, the sanitary sewer service line shall be Ductile Iron Pipe (DIP) for a minimum of ten (10') feet on each side of the water main. No joints are allowed within ten (10') feet of the water main.
6. All sewer service laterals shall have a sewer backwater valve installed per the most recently adopted International Plumbing Code (IPC).
7. Water and sewer service laterals shall not be installed in the same trench. A minimum six (6') foot horizontal separation shall be maintained.

E. Sanitary sewer service connections shall be located a minimum of four (4') feet away from a manhole or two (2') feet from a main line cleanout.

6.9.11 Pressurized Sanitary Sewer Service Connections

A. Pressurized sanitary sewer ejector systems, shall be, owned, operated and maintained, by the property owner. The Engineer of Record is responsible for the design and hydraulic analysis of the pressurized system.

B. The sanitary sewer service constructed within the right-of-way shall be per COC Standard Detail 1440-1 or 1440-2, as applicable. Connection to the gravity service shall be at the cleanout connection located at the right of way or easement line.

C. The City of Cottonwood does not allow extending private ejector lines across the frontages of adjacent lots or properties except where it is not feasible to extend the City main due to controlling grades. Any such ejector line shall be placed within a private easement shown on the plat or lot split survey. The developer shall extend City of Cottonwood main to provide frontage to the maximum extent possible.

6.9.12 Grease, Oil & Sand Interceptors

A. The installation of interceptors shall be in accordance with these standards.

B. Grease interceptors (GIs) shall be installed for all food service facilities (FSFs). Oil and sand interceptors shall be provided for vehicle service facilities (VSFs), laundry facilities, car washes, and other similar facilities. The Engineer of Record shall contact the City Engineer, to determine if an interceptor is required, and what type and size of interceptor is best suited for the proper handling of the projected waste streams. Interceptors shall be installed to be accessible to City of Cottonwood Utilities Operation staff and vehicles during operating hours.

C. Each business, restaurant or establishment shall discharge to a separate interceptor. Each interceptor shall be, shown to scale and stationed on the plans.

D. The Engineer of Record shall coordinate with the mechanical engineer to assure the following are considered in the design of grease interceptors:

    1. Design is compliant with the International Plumbing Code as adopted, Cottonwood Municipal Code (CMC), and approved by the City Engineer
    2. Tank size is appropriate to the maximum projected flow from the establishment and anticipates a ninety (90) day maintenance schedule
    3. Potential to develop odors
    4. Separation from pedestrian areas or corridors
    5. Avoid locating grease interceptor in parking garages, streets and under public parking spaces
    6. Ease of cleanup after maintenance and pumping
    7. Kitchen garbage grinders, shall not be installed
    8. Dishwashing equipment shall not be installed as to cause temperatures in the GI to inhibit separation of fats, oil, and grease (FOG) in the interceptor
    9. Grease traps will only be allowed in lieu of a GI in very small FSF's
    10. Interceptors shall be traffic rated and constructed of steel reinforced precast concrete or other approved rigid corrosion resistant material

6.9.13 Tract & Easement Requirements

A. All public sanitary sewer mains and appurtenances located outside the public rights of way or a private street tract with easement overlay shall be placed in the center of a minimum twenty (20') foot easement. The sanitary sewer main shall be located a minimum of ten (10') feet from the edge of the easement. The easement shall have legal access from a public right of way, shall be free of obstructions, shall not be located within a fenced area and shall be accessible at all times to City of Cottonwood service equipment such as trucks, backhoes, etc. Sanitary sewer main easements, located outside of paved areas, shall have a twelve (12') foot wide all weather access road per COC Standard Detail 1607.

    1. Sewer main depth of ten (10') feet or less: Minimum width shall be twenty (20') feet.
    2. Sewer main depth greater than ten (10') feet: Minimum width shall be two (2) times the depth (centered in easement).

B. Vegetation within the easement may consist of hydroseed, grasses or other materials, required to comply, with erosion control requirements. Trees shall be located outside of the easement.

6.9.14 Easement Abandonment Requirements

When a property owner or developer believes a sanitary sewer easement or portion thereof, is no longer required by the City of Cottonwood abandonment may be requested through the City Engineer. The owner or developer shall submit the request in writing with detailed documentation identifying specifically the reasons for abandonment. The City shall make the final decision based upon its long term needs.

6.9.15 Alternative Sanitary Sewer Systems

Developers or property owners may request that the City Engineer consider the use of alternative wastewater systems upon the Engineer of Records determination that conventional gravity or forced sanitary sewer systems cannot provide service to the development without conflicting other provisions of these standards.

ARTICLE 7: TRANSPORTATION – TRAFFIC

7.1 INTRODUCTION

7.1.1 Purpose

The purpose of this Article is to provide transportation and traffic engineering standards, guidelines, and geometric requirements for the design and construction of both public and private project improvements within the City of Cottonwood. This Article is complimentary and supplemental to the Cottonwood Municipal Code (CMC): Title 10 and Title 12, the Cottonwood Subdivision Ordinance (CSO) and other Articles of the Engineering Design Standards Manual.

7.1.2 Applicability

Transportation and Traffic facilities may include arterial, collector, and local streets, alleys, traffic signals, roundabouts, medians, street lighting, street signing, pavement markings, public transit, pedestrian facilities, bicycle facilities, traffic calming devices, pedestrian trails, and other traffic related facilities. The minimum requirements described herein are primarily based on safety considerations; therefore, under most circumstances, standards that provide a greater degree of safety may be used.

7.1.3 Design Standards & Guidelines

The most recently adopted editions of the following design standards and guidelines are approved references and shall be used in conjunction with this Manual.

A. (AASHTO) The American Association of State Highway and Transportation Officials Policies on Highway Design, Development of Bicycle Facilities, Roadside Design Guide, and Guide for the Planning, Design and Operation of Pedestrian Facilities
B. (MUTCD) The Manual on Uniform Traffic Control Devices, prepared by the U.S. Department of Transportation
C. (COC) City of Cottonwood Standard Details
D. (MAG) The Maricopa Association of Governments Uniform Standard, Specifications and Details for Public Works Construction
E. (ADOT) Arizona Department of Transportation Manual of Approved Signs
F. (ITE) Institute of Transportation Engineers Trip Generation Manual
G. (TRB) Transportation Research Board Highway Capacity Manual

7.2 PLANNING

7.2.1 Traffic Impact Analysis

Traffic Impact Analysis (TIA) shall be required for proposed developments, or additions to existing developments, that generate more than one hundred (100) vehicle trips during the morning or afternoon peak hour period. In addition, the City Engineer may require a TIA when changes in land use, traffic, and roadways occur, such as proposed property rezoning, when the original TIA is more than two (2) years old or where the

projected traffic volumes increase by more than ten (10%) percent. The City Engineer shall make the final determination regarding TIA requirements and the applicable category. The TIA shall be in a format as described in Section 240 Traffic Impact Analysis of the ADOT Traffic Engineering Guidelines and Processes. The TIA shall be prepared under the direction of a Professional Engineer (Civil) licensed to practice in the State of Arizona qualified to prepare TIA reports. There shall be no deviation from these requirements.

7.2.2 Roadway Classification

A. The City of Cottonwood has four (4) street classifications relating to land development. The location and street classification is determined as part of the site planning and platting process and shall be in conformance to the most recent City of Cottonwood General Plan available on the City of Cottonwood website at http://www.cottonwoodaz.gov/376/General-Plan-2025. The City of Cottonwood shall review each subdivision plat and shall specify any changes needed to conform with previously planned and approved street alignments. The City Engineer shall also specify the classification for each street involved in the subdivision plat. Refer to COC Standard Details for street typical sections. All land development shall provide for streets in accordance with City Code, the Subdivision Ordinance and any other planning documents at their normal alignments, widths and geometrics, as determined by the City Engineer.

1. 4-5 Lane Arterial
   Facilitate relatively long trip lengths at moderate (35 – 40 MPH) operating speeds with limited access to adjacent properties. Arterials serve major centers of activity in urban areas and have the highest traffic volume corridors. These streets are often major gateways to the community.
2. 3-4 Lane Collectors
   Collect, distribute, and provide direct access to commercial and industrial properties. Provide direct access to commercial properties. The collector street usually has lower volumes, moderate speeds (30 – 35 MPH), trip lengths and minimal through traffic, but may experience a proportionally high percentage of truck traffic.
3. 2-Lane Collector
   Collect and distribute moderate amounts of traffic between arterials and local streets at relatively low (25 – 30 MPH) operating speeds with greater accessibility than major collectors.
4. Local Street
   Provide direct access to abutting properties. Local streets possess relatively low volumes, operating speeds (25 MPH), trip lengths and minimal through traffic movements. Local streets shall be arranged as to discourage their use by traffic originating outside the immediate area.

7.2.3 Roadway Right of Way Requirements

A. The public right of way requirements shall be based upon recommendations of the City of Cottonwood's General Plan circulation element, Street Classification Map, and the Airport Area Transportation Plan; and the ultimate needs of the development. The dedicated right-of-way shall

provide sufficient area for the installation of utilities, cut and fill of slopes, drainage, postal gang boxes, sidewalks, traffic control devices, access management devices (medians), signs, fire hydrants, landscaping, auxiliary turn lanes, transit facilities and other facilities that may be located adjacent to street corridors. The minimum right of way requirements are provided in COC Standard Details 1601-1604 and in Table 7-1:

B. Standard Details for street typical sections are available on the City of Cottonwood website at http://www.cottonwoodaz.gov/363/Public-Works or at the City of Cottonwood Public Works Department.

TABLE 7-1: STREET RIGHT OF WAY REQUIREMENTS

CLASSIFICATION	MINIMUM RIGHT OF WAY (1)	PARKING	LANES	COC DETAIL
4-5 Lane Arterial	110' (2)	None	4-5 (3)	1604
3-4 Lane Collector	80' (2)	None	3-4 (3)	1603
2 Lane Collector	60'	None	2	1602
Local Street	40'	1 Side	2	1601

(1) Additional right of way may be required in special circumstances. These may include the need for auxiliary traffic lanes, to facilitate transit facilities, offsets and/or roadway shifts.
(2) Bike lane required.
(3) Shared turn lane/median provided.

7.2.4 Intersection Sight Visibility Triangle Easements

Sight visibility triangle easements shall be used as a means to limit the height of structures, vegetation, and other improvements on the portion of property and/or right of way immediately adjacent to intersections, alleys and driveways. These minimum sight visibility triangle easements however, shall not preclude the design engineer from calculating any additional right of way, easements or sight visibility triangle restrictions required per COC Standard Detail 1611.

7.2.5 Subdivision Street Planning

A. The planning of subdivision streets shall discourage through traffic.
   1. Street Location and Arrangement
      a. Street layout shall provide for the continuation of arterial and collector streets in adjacent areas, and shall conform to a standard grid system when possible, as specified in the EDSM, and Section 602.02 of the Cottonwood Subdivision Ordinance (CSO). In certain cases, paved street sections are required beyond the subdivision boundary to provide connectivity to the nearest City of Cottonwood maintained and paved street.
      b. Other classifications shall be required to follow a circulating system as well.
      c. Certain proposed streets, as designated by the City of Cottonwood Street Classification Map, shall be extended to the sub-division boundary to provide future connection with adjoining un-platted lands. In general, these extensions shall not be

farther apart than the maximum permitted length of a block, as specified in Article 4 of the Cottonwood Zoning Ordinance (CZO).

d. Local streets alignments shall be so arranged as to discourage their use as through routes by traffic originating outside the immediate area.

2. Partial Street Improvements

a. When a street is required adjacent to and parallel with two subdivision boundaries, the first subdivision to develop shall complete all required improvements. The first subdivision shall submit civil improvement plans to include, in dashed lines, the half street, which will be constructed in the future, and be responsible for the construction of full improvements, at a minimum from their boundary to centerline with the required AC structural section paved width no less than twenty four (24') feet. Additionally they shall be required to construct sidewalk, curb and gutter along their development frontage. *(Dependent on right of way width, circulation requirements and length of street, the first sub divider may be required to construct beyond centerline).

b. Half-street improvements terminating at the roadway monument or centerline shall be constructed with a thickened edge per COC Standard Detail 1201.

c. For all projects, a full street cross section is required for interior streets and a complete half-street cross section for perimeter streets if the street centerline is the project's boundary line.

d. The half-street is to be designed to match existing construction as much as possible unless doing so is likely to create an unsatisfactory condition. If changes are needed to correct conditions on an existing half-street to construct the other half of the street, the solutions must be developed in coordination with the City Engineer on a case-by-case basis. The plans for the new half-street must contain sufficient information on the profile and cross sections of the existing street to demonstrate that the new construction will match the old construction and result in a full street with proper cross sections.

3. Subdivision Blocks

a. Block lengths, widths and shapes of blocks shall be determined with due regard to:

i. Provision of sites suitable to the type of use contemplated.

ii. Zoning requirements, related to lot sizes and dimensions.

iii. Need for convenient access, circulation, control and safety of street and pedestrian traffic.

iv. Limitations and opportunities of topography.

v. Circulation within the subdivision, and access to the community facilities.

vi. Emergency vehicle access and circulation.

vii. Lengths as short as practicable and the discouragement of excessive vehicular speeds, but not to exceed one thousand two hundred (1,200') feet,

measured along the centerline of street and between intersecting street centerlines.

viii. Cul-de-sac lengths less than one thousand three hundred twenty (1,320') feet in length, as specified in Section 602.13 of the CSO.

4. Traffic calming measures can be implemented as part of new communities, or retrofitted into existing neighborhoods using the Council adopted Traffic Calming Policy available at the City of Cottonwood Public Works Department. If a community design calls for traffic calming elements, as required by City Code, the City Engineer shall work with the project engineer on suggestions and guidance on acceptable treatments. Traffic calming measures can vary, depending on the specific application. Example, traffic calming measures include medians, traffic circles and roundabouts, speed humps per COC Standard Detail 1210, raised crosswalks/intersections, chicanes, and street narrowing. The City Engineer must approve the use of traffic calming measures within the City of Cottonwood right of way.

7.3 HORIZONTAL ALIGNMENT

A horizontal curve is required when the angle of change in horizontal alignment is equal to or greater than five (5°) degrees. The nature of the surrounding development and topography, and the street classification will establish the factors that determine the radius of the curve for small deflection angles.

7.3.1 Minimum Curve Radius

A. The minimum radius of curvature is determined by the design speed or by the stopping distance unless otherwise approved by the City Engineer.

B. Minimum Radii Based on Design Speed:

Table 7-2 contains the minimum radius of curvature for each street classification with and without a super elevation of 0.02 ft/ft as derived from Exhibit 3-40 in Chapter 3 of the AASHTO "Green Book". Wherever possible, the radii used should be larger than that specified. If stopping sight distance conditions require a larger radius than that shown, then that larger radius becomes the minimum radius for the curve.

TABLE 7-2: MINIMUM HORIZONTAL CURVE RADIUS

	4-5 LANE ARTERIAL (ft)	3-4 LANE COLLECTOR (ft)	2-LANE COLLECTOR (ft)	LOCAL STREET (ft)
Minimum Radius of Curve without Superelevation	1,350	450	450	205
Minimum Radius of Curve with 2% Superelevation	1,190	730	420	175
Minimum Horizontal Curve Length	500	400	400	100
Stopping Sight Distance	305	250	200	155
Design Speed (MPH)	40	35	30	25

C. Stopping Sight Distance

When walls, buildings, bridge piers, cut slopes, vegetation, or other obstructions are near the roadway on the inside of a curve, they can block a driver's view of the road ahead. If they are too close, the driver will not have sufficient distance along the curved roadway to stop when a hazardous condition comes into view. For design purposes, the driver's eye is assumed to be three and one half (3 ½') feet above the center of the inside lane (the driving lane closest to the inside of the curve) and a hazardous condition is assumed to be an object two (2') feet high in the center of the inside lane, or most recent accepted AASHTO standards. The clear distance is measured from the center of the inside lane to the view obstruction. All designs shall ensure that sufficient sight distance exists. Refer to Table 7-3 for the minimum stopping sight distances for various street classifications.

TABLE 7-3: MINIMUM STOPPING SIGHT DISTANCE

STREET CLASSIFICATION	DESIGN SPEED (MPH)	STOPPING SIGHT DISTANCE (ft)
4-5 Lane Arterial	40	305
3-4 Lane Collector	35	250
2-Lane Collector	30	200
Local Street	25	155

7.3.2 Superelevation in Curves

A. Super elevation may be used in conjunction with the minimum radius on horizontal curves to provide improved comfort for the road user. Additionally super elevation of two (2%) percent may be used when the minimum radius cannot be provided due to circumstances beyond the control of the Engineer, such as when the general alignment cannot be changed, as determined through the EDSM, Article 10, process. Super elevation greater than four (4%) percent may not be used, except when approved through the EDSM, Article 10, process.

1. Run out and Runoff: For super elevation transitions, refer to the AASHTO publication, "A Policy on Geometric Design of Highways and Streets".
2. Storm Drain Requirement: Whenever super elevation is allowed a storm drainage system to collect the run off along the median curb (if constructed) shall be provided to ensure that nuisance water from the higher traveled way is not allowed to cross the lower traveled way.

7.3.3 Compound Curves

Compound curves (two curves with different radii in same direction) should be avoided. However if site conditions make the use of compound curves unavoidable, the shorter radius shall be at least two thirds (⅔) the length of the longer radius when the shorter radius is one thousand (1,000') feet or less. Compound curves are not permitted when design speeds require the shorter radius to be greater than one thousand (1,000') feet.

7.3.4 Special Tangent Sections between Curves in the Same Direction

A. On two-lane roads, tangent sections should be provided between two curves in the same direction. If the pavement cross-sections throughout the curves do not have super elevation, then the minimum lengths for tangent sections are per Table 7-4.

TABLE 7-4: TANGENT SECTIONS (Curves in the Same Direction)

DESIGN SPEED ROADWAY TYPE	MINIMUM TANGENT SECTION (ft)
40 MPH Arterial	300
35 MPH Collector	250
30 MPH Collector	200
25 MPH Local Street	100

B. If super elevation is provided in the curved portions of the roadway, then the super elevation transition lengths per AASHTO will determine the tangent lengths.

C. The City Engineer may approve the elimination of the tangent section between curves in the same direction on a case-by-case basis, when justified by terrain challenges or special topographic constraint.

7.3.5 Tangent Sections between Reverse Curves

A. Tangent section should be provided between two curves that curve in the opposite direction. Abrupt reversals in alignment should be avoided when possible. The distance between reverse curves should be at least the sum of the super elevation run out length and the tangent run out lengths. The required minimum lengths for tangent sections between reverse curves without superelevation are provided in Table 7-5:

TABLE 7-5: MINIMUM TANGENT SECTIONS (Reverse Curves)

STREET CLASSIFICATION	MINIMUM TANGENT SECTION (ft)
4-5 Lane Arterial	300
3-4 Lane Collector	200
2-Lane Collector	200
Local Street	100

B. The City Engineer may approve the elimination of the tangent section between reverse curves on a case-by-case basis when justified by terrain challenges or special topographic constraint.

7.3.6 Tangent Sections Approaching Intersections

A tangent section shall be provided between a street intersection and a curve unless otherwise approved by the City Engineer. The minimum tangent length is shown in Table 7-6:

TABLE 7-6: TANGENT SECTIONS AT INTERSECTIONS

STREET CLASSIFICATION	MINIMUM TANGENT SECTION (ft)
4-5 Lane Arterial	200
3-4 Lane Collector	150
2-Lane Collector	100
Local Street	50

7.4 VERTICAL ALIGNMENT

Vertical curves shall be designed to provide adequate sight distance, public safety and effective street drainage. Refer to AASHTO for sight distance requirements.

7.4.1 Vertical Curves

All straight grades, which deflect by more than one (1%) percent must be joined by a parabolic vertical curve. The length shall be determined using the current AASHTO "A Policy on Geometric Design of Highways and Streets." The minimum vertical curve length for a given design speed is determined as the greater of the value in the 'Minimum Length' column in Table 7-7, Minimum Vertical Curve Length or the length calculated from the 'Rate of Vertical Curvature' column by the formula:

$$L = K \times A$$

where: L = minimum curve length (ft)

K = rate of vertical curvature (ft/%)

A = algebraic difference in grades (%)

TABLE 7-7: VERTIAL CURVE REQUIREMENTS

DESIGN SPEED (MPH)	MINIMUM LENGTH (ft)	RATE OF VERTICAL CURVATURE K (ft per % grade change) (CREST)	RATE OF VERTICAL CURVATURE K (ft per % grade change) (SAG)
20	60	7	17
25	75	12	26
30	90	19	37
35	105	29	49
40	120	44	64
45	135	61	79

In all cases, every section of a street's vertical alignment must meet passing and stopping sight distance requirements for the design speed established for the street.

7.4.2 Horizontal & Vertical Curves

When horizontal and vertical curves are combined, the horizontal curve should lead or follow the vertical curve, and not be introduced near the top of a crest vertical curve or near the bottom of a sag vertical curve.

7.4.3 Longitudinal Street Grades

The maximum longitudinal street grade requirements are per Table 7-8:

TABLE 7-8: LONGITUDINAL STREET GRADE

STREET CLASSIFICATION	MAXIMUM (%)	MINIMUM (%)
4-5 Lane Arterial	6	0.50
3-4 Lane Collector	8	0.50
2-Lane Collector	8	0.50
Local Street	12	0.50

7.4.4 Speed Limits

A. Setting Speed Limits

1. On new roadway construction, speed limits are to be set within the following range:

   Local Streets: 25 MPH

   2-Lane Collectors: 25-30 MPH

   3-4 Lane Collectors: 30-35 MPH

   4-5 Lane Arterials: 35-40 MPH

2. A reduction in speed limit shall not normally be considered due to topographic, alignment or grade issues that can be resolved through traditional grading or construction techniques. However with exceptional circumstances a modification may be considered by the City Engineer.

7.4.5 Street Intersection Spacing

A. Separation of street intersections shall be designed to enhance safe ingress and egress, promote traffic circulation on the roadway system, and conform to the standards noted in Table 7-9. The following schedule shall serve as a guide for allowable street intersection spacing unless otherwise justified by a Traffic Impact Analysis.

1. Street Intersections Spacing on State Highways and Major Arterials:

   A minimum one half (½) mile spacing shall be required for all full access, signalized or roundabout controlled street intersections in all cases, except where subject to a highway access management plan or as otherwise approved by the City. Consideration for intersection spacing as close as one quarter (¼) mile may be considered through the EDSM, Article 10, process. Recorded easements for shared access, provision of acceleration/deceleration lanes,

traffic signals and other right of way improvements, for these cuts may be required prior to approval.

2. Street Intersection Spacing on Minor Arterials:
   A minimum, one quarter (¼) mile spacing shall be required for all full access, signalized or roundabout controlled street intersections in all cases. Consideration for intersection spacing as close as one quarter (¼) mile to six hundred sixty (660') feet may be considered to provide required access through the EDSM, Article 10, process. Recorded easements for shared access may be required prior to approval. Adjoining parcels under common ownership may be required to share a curb cut.
3. Street Intersection Spacing on Collectors:
   Street intersection Spacing on Collectors shall be spaced between one quarter (¼) mile and six hundred sixty (660') feet and is subject to the approval of the City Engineer.
4. Street Intersection Spacing on Local Streets:
   Street Intersection Spacing on Collectors and Local Streets shall be spaced between six hundred sixty (660') feet and two hundred fifty (250') feet.

TABLE 7-9: STREET INTERSECTION & CURB CUT SEPARATION

STREET CLASSIFICATION	MINIMUM STREET SPACING
State Highway	½ Mile (½ to ¼ mile)*
4-5 Lane Arterial	¼ Mile (¼ mile to 660' feet)*
3-4 Lane & 2-Lane Collector	¼ Mile to 660' feet
Local Streets	660' to 250' feet

* Consideration for reduced spacing as indicated can be made through the EDSM, Article 10, process.

7.4.6 Auxiliary Traffic Lanes

A. Auxiliary turning lanes permit the separation of conflicting traffic movements and remove vehicles from the flow of through traffic. Auxiliary lanes apply to both right and left turn lanes at street intersections and for deceleration lanes at midblock driveways. The requirements for an auxiliary lane may necessitate additional rights of way in addition to the standard sections. Determination of the need for any auxiliary turn lane shall normally be made using the Traffic Impact Analysis process, or when determined by the City Engineer. Exceptions to the storage and transition lengths may be granted through the EDSM, Article 10, process, where conditions do not allow the full recommended design standard to be met.

1. General Auxiliary Lane Design Considerations
   a. Lane width: Auxiliary lanes shall equal that of the through lanes but shall be at least ten (10') feet wide.
   b. Lane length: The length of the auxiliary lanes for turning vehicles consists of two (2) components, entering taper and storage length.
      i. Entering Taper

It is common practice to use a taper rate that is between eight to one (8:1)(longitudinal: transverse) for low speed roadways classified as major collectors and lower and fifteen to one (15:1) for higher speed roadways classified as minor and major arterials. When these standards cannot be met a standard taper length of ninety (90') feet for a single turn lane or and one hundred fifty (150') feet for a dual turn lane may be considered for urban streets by the City Engineer.

ii. Storage Length

At signalized intersections, the storage length needed depends on the signal cycle length, the signal phasing arrangement, and the rate of arrivals and departures of left and right-turning vehicles. The storage length is a function of the probability of occurrence of events and shall usually be based on one and one half to two times the average number of vehicles that would store per cycle, which is predicated on the design volume. This length shall be sufficient to serve heavy surges that occur from time to time. As in the case of an un-signalized intersection, provision shall be made for storing at least two vehicles. A minimum left turn storage length of one hundred fifty (150') feet shall be provided on streets with a design speed greater than forty five (45) MPH or at signalized intersections, all other driveway and streets shall be sixty (60') feet. A minimum right turn, storage length of one hundred (100') feet shall be provided on all streets with a design speed greater than forty five (45) MPH or at signalized intersections, all other driveways and streets shall be sixty (60') feet. A maximum storage of three hundred (300') feet is allowed for a single left turn lane.

2. Right-turn lanes

Dedicated right-turn lanes are required at all arterial intersections and may be required by the City Engineer at other intersection and driveway locations as determined by a Traffic Impact Analysis. Right-turn lanes are required on roadways where right-turning vehicles create delays or safety problems for other traffic movements. The need for a right-turn lane at a site access intersection depends on the speed of traffic on the road, the volume of traffic turning right, and the through traffic volume in the same lane as the right-turning traffic. Right turn deceleration lanes shall be required based on the ADOT Traffic Engineering Policies, Guidelines and Procedures (PGP), Section 245 and Table 7-10.

TABLE 7-10: RIGHT TURN LANE WARRANTS

PEAK HOUR TRAFFIC VOLUME ON THE HIGHWAY IN ADVANCING DIRECTION	MINIMUM PEAK HOUR RIGHT TURN TRAFFIC VOLUME # OF THRU LANES PER DIRECTION				
	1		2		3
	< 45 MPH POSTED SPEED	≥ 45 MPH POSTED SPEED	< 45 MPH POSTED SPEED	≥ 45 MPH POSTED SPEED	ALL SPEEDS
≤ 200	-	-	-	-	-
201 – 300	-	30	-	-	-
301 – 400	-	19	-	55	-
401 – 500	85	14	-	30	-
501 – 600	58	12	140	25	-
601 – 700	27	9	80	18	-
701 - 800	20	8	53	15	-
801 - 900	12	7	40	12	-
901 – 1,000	9	6	30	11	-
1,001 – 1,100	8	5	23	9	18
1,101 – 1,200	7	5	18	8	16
1,201 – 1,300	6	4	14	8	15
1,301 – 1,400	6	4	11	6	12
1400+	5	3	8	6	10

3. Left-Turn Lanes

   Left-turn lanes are required at all arterials and collector intersections. Left-turn lanes may also be required at street intersections on collectors and local streets based on projected left-turn volume and conflicting through volume, or other safety issues. Left-turn lanes are required on roadways where left-turning vehicles create delays or safety problems for other traffic movements. The need for a left-turn lane at a site access or intersection depends on the speed of traffic on the road, the volume of traffic turning left, and the through traffic volume in the same lane as the left-turning traffic. Left-turn lanes can be accommodated with a two-way left-turn lane on most collector streets at uncontrolled minor intersections. Dual left turn lanes should be considered when the turning volume exceeds 300 vehicles per hour; or physical constraints signal timing or the Traffic Impact Analysis, indicates a need as determined by the City Engineer. Left turn lanes shall be required based on the ADOT Traffic Engineering Policies, Guidelines and Procedures (PGP), Section 245 and Table 7-11.

TABLE 7-11: LEFT TURN LANE WARRANTS

PEAK HOUR TRAFFIC VOLUME ON THE HIGHWAY IN ADVANCING DIRECTION	MINIMUM PEAK HOUR LEFT TURN TRAFFIC VOLUME # OF THRU LANES PER DIRECTION 1		2 (Undivided)*	
	< 45 MPH POSTED SPEED	≥ 45 MPH POSTED SPEED	< 45 MPH POSTED SPEED	≥ 45 MPH POSTED SPEED
≤ 200	30	15	-	-
201 – 300	12	12	40	30
301 – 400	12	12	30	25
401 – 500	12	12	25	18
501 – 600	12	12	15	12
601 – 1,000	12	12	10	8
1,000+	12	8	10	8

- On non-freeway divided highways, left-turn or U-turn should be provided at median breaks.

4. Acceleration Lanes

   Acceleration lanes allow vehicles to make the necessary change between the speed of operation on a highway or street and the lower speed on the intersecting roadway. These lane types are only required on arterials or State Highways with high speed limits. Determination of the need for an acceleration lane shall be determined by the Traffic Impact Analysis.

7.4.7 Driveway Access Guidelines

A. Driveways shall be designed and located in such a way to provide safe ingress and egress with the fewest number while promoting efficient traffic circulation on the City of Cottonwood's roadway system.

   1. Driveway Spacing

      Minimum driveway spacing shall conform to the standards noted in Table 7-12 unless otherwise approved by the City Engineer. This minimum spacing applies to proposed site driveway separation, as well as separation from existing or planned driveways on adjacent parcels and across the street. To provide safe turning movements from driveways, on streets without raised medians, new driveways shall align with existing driveways on the opposite side of the street. Corner parcels may be required to have all access from a side street as determined by the City Engineer. A non-vehicular access easement (NVAE) may be required to restrict curb cuts to approved locations.

TABLE 7-12: DRIVEWAY SPACING

STREET CLASSIFICATION	MINIMUM DISTANCE DRIVEWAY SPACING (ft)
Controlled Access Facility	None
Limited Access Facility	TBD by Traffic Impact Analysis
State Highway	As Determined by the ADOT District Engineer
Arterials	200
Collectors & Local Streets	As Determined by TIA or City Engineer

2. Driveway Number

   Table 7-13 and the following shall serve as a guide for allowable number of driveways on a site unless justified by a Traffic Impact Analysis. Safe driveway requirements per the above section shall be provided at a minimum.

   a. At least one (1) driveway per abutting street shall be allowed unless physical constraints or otherwise directed by the City Engineer.
   b. One (1) additional driveway may be allowed for a site with continuous frontage of three hundred (300') feet or more on a roadway classified as minor arterial or lower and four hundred (400') feet or more on a major arterial or higher.
   c. Two (2) additional driveways (three (3) total) may be allowed for a site with continuous frontage of more than six hundred (600') feet or more on a roadway classified as minor arterial or lower and eight hundred (800') feet or more on a major arterial or higher.
   d. An additional service type driveway may be allowed for a site under the following conditions:
      i. Continuous frontage of six hundred (600') feet or more on a roadway classified as minor arterial or lower
      ii. Continuous frontage of eight hundred (800') feet or more on a major arterial or higher
      iii. The site layout is such that the service driveway is unlikely to be used by customers of the businesses on the site, and designed as such
   e. Shared access and internal connectivity between adjacent parcels shall be encouraged. Adjoining parcels under common ownership may be required to share a curb cut.
   f. Driveway location must be evaluated with respect to the particular site layout and location. Variations may be permitted where a Traffic Impact Analysis approved by the City Engineer justifies a departure from these guidelines or an exception is granted through the EDSM, Article 10, process.

TABLE 7-13: NUMBER OF DRIVEWAYS

STREET CLASSIFICATION	STREET FRONTAGE (ft)	NUMBER OF DRIVEWAYS
Controlled Access Facility		None
Limited Access Facility	> 1 Mile	TBD by Traffic Impact Analysis
State Highway	> 800	3*
State Highway	≥ 400 to 800	2
State Highway & Arterials	< 400	1
Arterials & 3-4 Lane Collector	> 600	3*
Arterials & 3-4 Lane Collector	≥ 300 to 600	2
Arterials & 3-4 Lane Collector	< 300	1
2-Lane Collector & Local Streets	Any	1*

** Actual number to be determined through a Traffic Impact Study or by approval of the City Engineer.*

3. Driveway Location Limitations

   A new driveway shall not be allowed within twenty (20') feet of any commercial property line except when it is a joint use driveway, serving two abutting commercial properties. Commercial driveways shall not be allowed within seventy five (75') feet of the right of way line of an intersecting collector street, two hundred (200') feet of an intersecting Minor Arterial, and three hundred (300') feet of an intersecting Major Arterial. Exceptions may be granted through the EDSM, Article 10, process.

4. Right-In-Right-Out-Design

   When a right-in-right-out design is required by the City of Cottonwood, the design engineer shall refer to COC Standard Detail 1650 and 1651 for specific design requirements.

7.4.8 Median Design

A. In the interest of public safety, traffic management and street aesthetics, medians are used to separate traffic flow, channelize left turns, control access and reduce conflicts.

   1. Raised Median

      Raised median islands shall be installed in accordance with MAG standards.

      a. Storage Lane Lengths and Tapers: Refer to EDSM, Section 7.4.6 "Auxiliary Traffic Lanes" for minimum specific dimensions, unless the Traffic Impact Analysis results or City Engineer demonstrates longer lengths are required.
      b. Median curb type: Refer to EDSM, Section 7.6.3 "Median Curb" for requirements.
      c. Termination: Medians shall terminate in a bull nose per MAG Standard Detail 223. Other types may be considered based on the application through the EDSM, Article 10, process.
      d. Full access median openings consist of right in/right out and left in/left out turning movements. Full access median openings may be required to be signalized.

e. Partial access median openings consist of right in/right out and left ingress only while prohibiting left egress. Partial openings allow fewer traffic conflicts and create a lower potential for collisions.
f. Spacing for median openings is measured from the center of the median opening to the center of the adjacent median opening or intersection.
g. All medians shall be signed per the MUTCD guidelines. The beginning of each median where none exists prior, are to be signed. Median breaks in a continuous median are required to have object markers.

2. Median Openings

Raised medians on arterial streets are provided to reduce conflicts, channelize movements for safety, and improve traffic flow. It is not possible to provide an opening in the median for every driveway. Careful consideration shall be given to each request for a median opening to ensure that the safety and the intent of the median is not compromised by a proliferation of median cuts. The preference for access along arterial streets is to have full access median openings that align at not less than one quarter (¼) mile intervals. The design engineer shall line up full access openings in compliance with the street system planned for the arterial corridor. Full access openings shall occur at the mile, one half (½) mile, and one quarter (¼) mile interval. The preference for access at less than one quarter (¼) mile spacing is to have a partial access median opening; however these openings are subject to such parameters as safety of operation, flow of traffic requirements for storage, and feasibility of geometrics. These parameters shall be addressed in a Traffic Impact Analysis when requesting a partial access opening. All median openings shall be prohibited within six hundred sixty (660') feet of an arterial-to-arterial intersection. Full access median openings at less than one quarter (¼) mile intervals or within six hundred sixty (660') feet of an arterial-to-arterial, intersection must go through the EDSM, Article 10, process. The applicant shall be required to submit a standard Traffic Impact Analysis that also demonstrates the following:

a. The full access opening is spaced safely and shall not be in conflict with the planned grid system for the corridor.
b. The full access opening shall allow for safe operation.
c. The full access opening shall not compromise storage requirements.
d. The full access shall not compromise safety for all other turning movements.
e. The full access opening shall not significantly affect the flow of traffic on the arterial.
f. The full access opening will not negatively affect accesses to future property development.

7.5 EASEMENTS & DEDICATIONS

7.5.1 Public Utility Easement (PUE)

A minimum eight (8') foot wide, Public Utility Easement (PUE) shall be located adjacent to each side of the dedicated street right of way for streets classified as Local Streets. Public Utility Easements may not be located within the side or back property lines without the approval of the City Engineer. Landscaping installed in a PUE shall be of the shallow root, and non-intrusive variety, and shall be maintained by the property owner.

7.5.2 Non-Vehicular Access Easement (NVAE)

Non-Vehicular Access Easement (NVAE) limits vehicular access to a site from arterial, and collector streets. On local streets, a NVAE on private lots is required adjacent to all greenbelts and open space areas. Vehicular access shall be restricted by use of a one (1') foot NVAE, at locations other than street intersections and approved driveways or as requested by the City Engineer. The ownership and maintenance of the NVAE remains with the property owner of the parcel from which the NVAE is granted. NVAE shall be shown on the final plat.

7.5.3 Temporary Construction Easement (TCE)

An easement placed on a parcel of land temporarily for the use of construction personnel and equipment. The easement shall be extinguished upon the completion of the construction project.

7.6 CURB & GUTTER

7.6.1 Vertical Curb

A. Vertical curbs are required on all streets classified as Minor Arterial and higher, Collectors and Local Streets at curb returns, adjacent to common areas, and other areas to restrict vehicle access.
B. The height of all vertical curb shall be six (6") inch unless otherwise approved by the City Engineer. Installation shall be per COC Standard Detail 1220-1, Type "A". Vertical curbs shall be six (6") inch at all medians, and curbs adjacent to landscaping tracts or vertical structures (e.g. cluster mailboxes, utility cabinets, signal equipment, monument signing, etc.).

7.6.2 Roll Curb

Roll curb per COC Standard Detail 1220-1, Type "C" and 1220-2 may be installed on Local Streets.

7.6.3 Median Curb

In locations where raised medians are constructed, vertical curb is required. Median curb shall be installed per MAG Standard Detail 222, Type "A". With City Engineer approval roll curb may be used around medians installed in low speed, low volume streets, to facilitate truck turning movements with traffic calming projects, or where needed to maintain adequate width for emergency vehicles.

7.6.4 Curb Returns

A. Vertical curb shall be used through the curb return from point of curvature (PC) to point of tangent (PT) regardless of whether the tangent curb sections are vertical or roll curb.

B. Curb Return Radii on Streets

The radii for curb returns shall be in accordance with Table 7-14: All dimensions are to back of curb.

TABLE 7-14: CURB RETURN RADII

	INTERSECTING STREET CLASSIFICATION			
STREET CLASIFICATION	MAJOR ARTERIAL	MINOR ARTERIAL	COLLECTOR	LOCAL STREETS
Major Arterial	TBD*	TBD*	35’	35’
Minor Arterial	TBD*	TBD*	35’	35’
Collector	35’	35’	30’	30’
Local Streets	35’	35’	30’	25’

*Curb radii for Arterial Streets shall be determined by speed and a TIA. In all cases, they shall be a minimum of thirty-five (35’) feet.

C. Sidewalk Ramp

Sidewalk ramps shall be constructed at all curbed street intersections, at medians with pedestrian refuges, and wherever a pedestrian access route crosses a street. Sidewalk ramps shall align with the sidewalk ramps on the opposite side of the street. If a traffic signal exists or is planned, the sidewalk ramp and apron shall provide access to the pedestrian push button, per ADA requirements.

1. Directional or double sidewalk ramps per MAG Standard Details 236-1 thru 236-5 shall be installed at all arterial and collector street intersections. Where directional sidewalk ramps are required, the minimum curb return radius shall be thirty (30’) feet.
2. Single sidewalk ramps per MAG Standard Details 236-1 thru 326-5 shall be installed at all local street intersections.
3. At T-intersections one sidewalk ramp shall be installed per MAG Standard Details 238-1 thru 238-3. The ramp shall normally be placed on the right hand side of the TEE and align with ramps on the opposite side of the street.
4. Along safe routes to school, any crosswalk location or trail connections, additional sidewalk ramps may be required.
5. Projects that include construction improvements at existing street intersections where sidewalk ramps are located shall note whether the ramps comply with current City of Cottonwood standards. If the sidewalk ramps are not in compliance, they shall be removed and replaced with sidewalk ramps that meet City of Cottonwood standards.

7.7 SIDEWALKS

Installation of sidewalks shall promote and enhance pedestrian safety and the aesthetic quality of the roadway. Streets constructed to City of Cottonwood standards shall have sidewalks installed per COC Standard Detail 1230. Sidewalks shall remain within the right of way.

7.7.1 Sidewalk Widths

A. Arterial Street:
    1. Detached Sidewalk = Six (6') feet wide with an eight (8') foot separation (parkway) from back of curb.
    2. Paved Multi-Use Path = Twelve (12') feet wide with a four (4') foot separation (parkway) from back of curb.

B. Collector Street:
    1. Detached Sidewalk = Six (6') feet wide with a three (3') foot separation (parkway) from back of curb.

C. Local Street:
    1. Detached Sidewalk with 2' gutter = Six (6') feet wide with a four (4') foot separation (parkway) from back of curb.
    2. Detached Sidewalk with 3' gutter = Six (6') feet wide with a three (3') foot separation (parkway) from back of curb.

    NOTE: Detached sidewalks and multi-use paths shall connect to the attached sidewalk at each curb return. They shall also use a curved design with a minimum radius of three (3') feet for the connection at curb return sidewalk. Sidewalk dimensions shall not include the curb width.

7.7.2 Pedestrian Ways

Pedestrian ways shall be constructed to connect sidewalks with public and private facilities not located in the public street right of way. Public pedestrian ways shall be within a tract or easement for the purpose of defining the access and maintenance responsibility. The minimum width shall be six (6') feet, or a width consistent with adjacent trails, and may be used for additional purposes as approved by the City Engineer. If additional uses are approved, the minimum required width may be increased depending on the specific use.

7.7.3 Multi-Use Paths / Trail Facilities

Developments which impact existing or planned trails as detailed in the Cottonwood Bicycle and Pedestrian Master Plan, are required to provide right of way or other accommodation to extend the trail system through or adjacent to the development, as directed by the City Engineer. The development shall design and build appropriate and safe crossings, which shall include consideration of street classification, speed, traffic volume, trail volume, proximity to signalized intersections, and cost; and link new local pedestrian facilities to the regional system.

A. Multi-use path and trail surfaces:

Multi-use path and trail surfaces should be firm, stable, and slip resistant material. Minimum design criteria for multi-use path are as follows:

1. Multi-use paths where required shall have a minimum of fifteen (15') foot public right of way or easement dedicated to the public when not included as part of the roadway right of way
2. Two-way travel standard width shall be twelve (12') feet to accommodate the use of bicycles, pedestrians and maintenance vehicles. In no case shall the travel width be less than ten (10') feet
3. One-way travel shall be a minimum six (6') feet in width
4. Maximum longitudinal grade shall match that of the roadway it parallels
5. Minimum one (1') foot graded area adjacent to both sides of the path
6. Minimum separation of four (4') feet from a roadway
7. Maintain a minimum vertical clearance of eight (8') feet, and keep free of protruding objects
8. Paths designated for equestrian use shall have a minimum vertical clearance of ten (10') feet and be constructed with trail surfaces suitable for that use
9. Fall protection if required, shall be a minimum height of forty two (42") inches for pedestrian facilities and fifty four (54") inches for facilities with bike and equestrian uses
10. Lighting shall be required for all underground pedestrian crossings

B. Trail Crossing Type and Design:

Several federal resources address trail and shared use path design, which can be used, by the design Engineer as references. These include the American Association of State Highway and Transportation Officials (ASSHTO) "Guide for the Development of Bicycle Facilities"; and the Federal Highway Administration (FHWA) "Equestrian Design Guidebook for Trails, Trailheads and Campgrounds. Whenever practical, a grade-separated crossing is preferred operationally over an at-grade crossing, however the City Engineer may consider at grade crossings based on a technical submittal from the design Engineer. This submittal shall either show that the grade separated crossing is unfeasible because of topography or that an at-grade crossing is operationally safe and the added expense and maintenance of the grade-separated crossing is not justified. The following summarizes the requirements of any trail crossings:

1. Trails, which consider equestrian at-grade crossings, shall use an alignment that is perpendicular to the street. The crossing shall be on a straight segment of the street, and optimally in a location where motorists might expect an intersection. Consistency in the placement and design of intersections allows all users to identify them more readily.
2. Appropriate tread surfaces at crossings are critical to equestrian safety and the use of rough textured concrete, washed concrete or rubberized railroad type inserts is preferred.
3. Provision of waiting areas is required where trails cross at-grade. These are created by expanding the width of the trail surface as it approaches the street, or forming a rectangular or fan-shaped waiting area using fencing.

4. At locations were the street exceeds 80' curb to curb a median refuge is required to break the crossing into two (2) legs. The refuge shall be designed to allow storage of tandem bikes or equestrians without encroachment into travel lanes.
5. Traffic signals or hybrid Beacons (HAWKs) can enhance at-grade trail crossings when warranted. Deployment of such devices must not be taken lightly. They shall only be installed at locations with significant trail user volumes.

7.8 PAVEMENT CROSS SECTIONS

7.8.1 Undivided Streets

Undivided streets should have a normal crown that is a two-way cross slope with the cross section high point on the street centerline. A raised crown with a constant cross slope of two (2%) percent is required on all public streets. Inverted crown sections are not allowed, except as required at arterial or collector street intersections and alleyways. Within an arterial or collector street intersection, the cross slope shall comply with COC Standard Detail 1600 to accommodate ride ability through the intersection.

7.8.2 Divided Streets

Divided streets should have cross slope on each pavement section. The high point of each slope on each pavement section must occur on the edge of the pavement nearest to the median. Unusual conditions may cause cross slope requirements to vary, but normally, the desirable cross-slope is two (2%) percent. The desirable slope from top of median curb to top of median curb shall not exceed fifteen (15%) percent.

7.9 CUL-DE-SACS & KNUCKLES

7.9.1 Cul-De-Sac Street

A. A cul-de-sac street is a street that serves more than one (1) property owner and has only one (1) direct access to the public street system.
B. Cul-de-sac streets shall be a maximum of one thousand three hundred twenty (1,320') feet in length and terminate in a circular turnaround. Refer to COC Standard Detail 1620-1 and 1620-2 for right of way, street improvement requirements and dimensions and Section 602.13 of the CSO.

7.9.2 Knuckles

Knuckles are areas on the roadway expanded to provide a turn-around and additional access or lot frontage on local streets. Knuckles are required at intersections where changes in alignment are present but a centerline curve is not provided. Knuckles are permitted to improve accessibility to odd-shaped sites. The use of knuckles (except on a cul-de-sac) on other than local streets must be approved by the City Engineer. Refer to COC Standard Detail 1622-1 and 1622-2 for right of way, street improvements and dimensions.

7.10 DEAD END STREETS

Dead end streets shall be prohibited except short stubs where a street connection is necessary to serve adjacent un-platted land that will develop at a future date. Temporary turnarounds shall be required where

the street stub exceeds one (1) lot or one hundred (100') feet in length. The developer shall provide a sign at the stub declaring that the particular street shall connect with any future development.

7.11 MAIL BOXES

A. Curb Side Mailboxes:

1. Curb side mailbox with Parkway: When an open space exists between the back of curb and the sidewalk of three (3') feet or more (parkway), the mailbox shall be installed so that the front is flush with the back of curb. The mailbox shall be a minimum of forty-two (42") inches above ground, and on a two (2") inch diameter steel or four (4"x4") inch wood breakaway post. Refer to COC Standard Detail 1138.
2. Curb side mailbox behind sidewalk shall not be permitted.
3. Masonry mailboxes will not be permitted within the street right of way.

B. Cluster Mailboxes:

Cluster style mailboxes: a style whereby mailboxes, meeting the specifications of the United States Postal Service, are assembled and grouped together in a single area of land so that they are regarded as one unit. Requirements:

1. The location of a cluster box shall be approved by the City Engineer and the local, United States Postal Service. For cluster boxes in new subdivisions, the location of the unit shall be shown on the preliminary plat.
2. No driveway access shall be constructed within ten (10') feet of the cluster mailbox.
3. Units shall not be installed within one hundred (100') feet of a street intersection. Units shall not be installed in locations where because of the position of, shape or color it may interfere with, obstruct the view of or be confused with any traffic sign, signal or device.
4. A vehicular pullout area shall be provided at all cluster mailbox locations to not impede normal traffic of the primary roadway used for access.
5. Cluster mailboxes shall be located on property lines or on a dedicated open tract on the same side of the street designated as a "no parking" zone and in a manner as to provide sufficient sight distance for pedestrian access.
6. A sidewalk shall be constructed perpendicular to the curb adjacent to the unit providing a pedestrian connection from the unit to the curb.
7. The cluster box unit shall be located on a concrete pad and the unit shall be setback a minimum of one (1') foot from the back edge of the sidewalk to the nearest edge of the unit.
8. Cluster mailboxes units shall not be located to conflict with any public utilities, including but not limited to manholes, fire hydrants, meters, vaults and cabinets.
9. When in the opinion of the City Engineer it is necessary for pedestrian and vehicular safety, an access driveway turnout shall be required at the developer's expense, built three (3') feet outside of the face of curb.

7.12 TRAFFIC CONTROL DEVICE SELECTION

A. Traffic control device selection is critical to the successful operation of the transportation network. Several options exist for controlling traffic at intersections but this section shall focus on the two highest levels of control, which include traffic signals and roundabouts. These are often interchangeable and the use of one over the other is not always evident. The following information provides guidance for the design Engineer on choosing one over the other. This justification procedure shall be documented in the Traffic Impact Analysis for each intersection requiring all way stop control or traffic signalization.

1. Installation Warrants:
   The studies required to justify the installation of a traffic signal are based on the warrants and requirements set forth in the Manual of Uniform Traffic Control Devices (MUTCD). No such warrants or requirements exist for roundabouts however, roundabouts shall be considered as an alternative to traffic signals and all way stop control whenever they are warranted.
2. Roundabout Criteria:
   Roundabouts shall be considered the most appropriate form of control at any intersection if three general questions can be answered positively.
   a. Will a roundabout be expected to perform better than other alternative control modes? In other words, will it reduce delay, increase capacity, reduce queue lengths or solve some other operational problem?
   b. Will a roundabout provide improved safety over other alternative control devices?
   c. Will a roundabout be expected to provide improved operational characteristics over other alternative control devices? This includes adjacent access operations and emergency vehicle operations.
3. Comparative Performance:
   Once it is determined a roundabout is the most appropriate form of control based on the operational criteria; the final stage is to compare the construction cost, life-cycle cost, right of way considerations, “reserve capacity” (the ability to accommodate traffic growth), and constructability. If no clear disadvantage is evident with the roundabout then it shall be moved forward as the preferred traffic control device.
4. Roundabout and Traffic Signal Design:
   a. Roundabout design can be performed by either a general civil engineering firm or a specialized roundabout designer, however if a general civil is used the plans shall require a final design review by a recognized roundabout expert as agreed upon by the City and paid for by the developer/engineer.
   b. Traffic signal design shall be conducted by a registered Civil or Traffic Engineer with particular expertise in traffic signal control systems.
5. Roundabout Plan Checklist:

The Roundabout Plan Checklist shall be used as a guide to ensure that all of the basic elements are included in the roundabout plans. Any roundabout plan that does not include each of the basic elements included on the checklist shall be returned for revision and resubmittal.

7.13 ON-STREET PARKING

A. Sign Spacing:

Signs restricting on street parking shall normally be placed in accordance with the distances shown in Table 7-15. These may be adjusted as required by the City Engineer when:

1. An assessment of the anticipated parking demand indicates a change is needed
2. The roadway vertical or horizontal alignment reduces the visibility of the signs
3. Parking is allowed in some areas and not in others to indicate the beginning and ending of no parking zones. This can be accomplished using "Begin" and "End" placards, arrows or specific wording on the signs. This also applies when parking time limits are used, or handicap spaces are designated, in which case individual stalls shall be signed.
4. For special conditions such as hydrants, sight visibility requirements, special restrictions needed for traffic control devices, etc.

TABLE 7-15: PARKING RESTRICTION SIGN SPACING

STREET CLASSIFICATION	MINIMUM SIGN SPACING (ft)	MAXIMUM SIGN SPACING (ft)
4-5 Lane Arterial	400	500
3-4 Lane Collector	200	300
2-Lane Collector	200	300
Local Streets	150	250

B. Parking Restriction Guidelines:

On street parking shall be restricted on those roadways with insufficient width to allow both parked vehicles and the safe, efficient movement of through traffic as shown in Table 7-16.

TABLE 7-16: PARKING RESTRICTION GUIDELINES – STREET WIDTH

ROADWAY PAVEMENT WIDTH (ft)	PARKING ON ONE SIDE	PARKING ON TWO SIDES	NO PARKING ALLOWED
≤ 28			X
> 28 to ≤ 32	X		
> 32		X	

* Parking guidelines assume bike lanes are not used.

C. Sign Type:

Signs restricting on street parking shall be of the type and size in accordance with those shown in Table 7-17. Alternative types and sizes shall only be approved for special circumstances as approved by the City Engineer.

TABLE 7-17: PARKING RESTRICTION SIGN TYPE & SIZES

STREET CLASSIFICATION	APPROVED SIGN	SIZE	PLACARD OR ARROW	ORIENTATION TO TRAVEL WAY (degrees)
4-5 Lane Arterial	R8-3	30" x 30"	N/A	90
3-4 Lane Collector	R8-3	24" x 24"	N/A	90
3-4 Lane Collector	R7-9	12" x 18"	N/A	90
2-Lane Collector	R7-1	12" x 18"	Begin & End	90
			Here to Corner	30 to 45
Local Street	R7-1	12" x 18"	Begin & End	90
			Here to Corner	30 to 45

7.14 BUS BENCH / SHELTER LOCATIONS

A. When properly located, adequately designed, and effectively enforced, bus stops can improve service and expedite general traffic flow. Decisions regarding bus stop spacing and location call for a careful analysis of passenger service requirements (demand, convenience, and safety), the type of bus service provided and the interaction of stopped buses with general traffic flow. The following guidelines provide direction for the design Engineer for the installation of bus stops in the City of Cottonwood.

1. Stop Spacing

   Bus stops are locations where passengers access the transit system. Bus stops must therefore be convenient to the places where passengers wish to go. Convenience and speed must be balanced in determining appropriate bus stop placement, as too many bus stops can slow down travel times and impede traffic movements. The following guidelines on bus stop spacing shall apply:

   a. In the downtown area, bus stops shall have a spacing of eight hundred (800') feet to one thousand three hundred (1,300') feet.

   b. Outside the downtown area, bus stops shall be spaced no less than one thousand five hundred (1,500') feet apart.

2. Bus Stop Locations

   Bus stops shall be placed along the street curb for direct safe passenger access to and from the sidewalk, waiting and walking areas. Bus stops are placed in one of three locations: far side (located immediately after an intersection); nearside (located immediately before an intersection); and mid-block (located between intersections). Each of these locations offers advantages to vehicle drivers and pedestrians. However, in general the following guidelines apply to their use:

   a. Far-side stops are the preferable choice for service because they reduce conflicts between right-turning vehicles and stopped buses, eliminate sight distance deficiencies on approaches to an intersection, and encourage pedestrian crossing at the rear of the bus.

b. Nearside stops shall be avoided whenever possible. However, they may be considered on a case-by-case basis if in the opinion of the City Engineer a far-side stop is deemed unsafe or impractical.

c. Midblock stops are considered special case stops and are to be used only in special circumstances when in the opinion of the City Engineer there is a special need based on trip attractors, transfer points or other special demands that cannot be accommodated at an intersection nearby. Bus turnouts shall be used for midblock stops.

3. Bus Stop Benches

a. Each bus stop location shall consist of one bench or shelter unit unless otherwise approved. Multiple benches at one stop location may only be considered when ridership records indicate a clear need for their installation.

b. Bus benches shall be placed in a manner that sidewalk passage is not narrowed to less than the minimum widths set forth by the Americans with Disabilities Act.

c. Bus bench placement, which would result in sidewalk widths less than thirty six (36") inches, shall require the transit provider to install additional sidewalk width and acquire additional right of way at their expense, as needed to maintain ADA required sidewalk widths.

7.15 TRAFFIC SIGNALS & LIGHTING

7.15.1 Public Street Lighting

Developers of all residential, commercial, industrial or other types of properties are responsible for the design and installation of street lighting on all streets within and adjacent to their sites when required by the Cottonwood Municipal Code (CMC). Street light plans shall be prepared and sealed by a licensed electrical engineer registered in the State of Arizona. The street lighting design shall be reviewed and approved by the City and shall take into account any policy promoting "dark sky initiatives" in recommendations on the number, spacing, and shielding of new street lighting. The street light design shall include numbering of the street light poles as directed by the City Engineer and/or Arizona Public Service.

7.15.2 Street Light Selection

These street lighting criteria and guidelines apply for all standard installations. Alternative street light designs using old-style posts and lamps, for example, may also be acceptable by the City for public street light systems when consistent with the Historic Globe Street Light Overlay District Map and requested by Developers and/or property owners. These alternative designs may be granted through the EDSM, Article 10, process.

7.15.3 Street Light Design

The developer shall retain a Professional Electrical Engineer, registered in the State of Arizona, to prepare the lighting system design and appropriate calculations relative to illumination levels. Illumination design shall follow the recommendations of the American National Standard Practice for Roadway Lighting, Illuminating

Engineering Society of North America, IES RP-8. The Luminance criteria, with light loss factors of 0.80, shall be used to determine the compliance with the IES RP-8 and City street lighting design guidelines. High Pressure Sodium (HPS) fixtures are the standard for all installations.

7.15.4 General Street Light Notes

A. Street lights shall normally be located on property lines whenever possible, at least five (5') feet from driveways or any above ground facility, and at such locations to maximize their separation from trees.
B. Streetlights shall be located on the outside edge of the curve for horizontal curvilinear street alignments.
C. The minimum curb overhang by street light luminaries (excluding historic globe style) shall be no less than two (2') feet.
D. Where the sidewalk is separated from the curb (parkway exists), the street light pole shall be centered two (2') feet from the gutter flow line.
E. Where the sidewalk is contiguous to the curb and the sidewalk the street light pole shall be placed one and one half (1 ½') feet behind the sidewalk.
F. Street trees can significantly interfere with the efficient lighting of streets, and shall not be permitted within thirty (30') feet of any street light standard.
G. All electrical connections and supply shall be placed underground.

7.15.5 Cobra Head Street Light Luminaries

A. Standard Details

For the purpose of simplifying street light inventories, street light maintenance and consistency with APS requirements, the City of Cottonwood has adopted a preapproved cobra head street light standard for use on all City of Cottonwood owned street light systems (except areas where historic globe lighting is used).

1. Cobra head streetlights shall be per COC Standard Detail 1170.
2. All luminaries shall be "Cobra" head style, grey in color.
3. Multi tapped 120-240-277 voltage ready.
4. All lamps for Cobra head street light systems shall be high-pressure sodium (HPS) lamps. These HPS lamps shall meet one of the following criteria based on the classification of the roadway and the use specified in Table 7-18. 100 watt or 9500 minimum initial lumens, 150 watt or 16,000 initial lumens, or 250 watt or 30,000 minimum initial lumens.

TABLE 7-18: STREET LIGHT LUMINAIRE WATTAGE

STREET CLASSIFICATION	HEAD TYPE (HPS)	LOCATION (USE)	WATTAGE
4-5 Lane Arterial	Cobra Head	Roadway & Intersection	250 to 150*
3-4 Lane Collector	Cobra Head	Intersection	250 to 150*
3-4 Lane Collector	Cobra Head	Roadway	250 to 150*
2-Lane Collector	Cobra Head	Intersection	150 or 100*
2-Lane Collector	Cobra Head	Roadway	150 or 100
Local Street	Cobra Head	Roadway & Intersection	100
Local Street	Historic Globe	Roadway	70

*Specific use shall be directed by the City Engineer based on local conditions.

B. Location and spacing

Lighting Layout: The street lighting layout required is dictated by the street classification and shall be continuous. The design engineer shall consult the City Engineer to assist in determining the appropriate street classification. The spacing of streetlights shall conform to the criteria below.

1. Arterial Streets: Lights shall be required at an average spacing of 150' (staggered) with spacing of 300' on each side.
2. Collector Streets: Lights shall be required at an average spacing of 200'. Light may be placed on one side of the street or staggered.
3. Local Streets: Lights shall be required at or near the end of cul-de-sacs longer than one hundred forty (140') feet measured from a typical Stop sign location, at changes of horizontal street alignment of forty five (45°) degrees or more that are two hundred (200') feet or more from a street intersection. If optional midblock locations are used then the spacing of lights is about two hundred seventy five (275') feet, but never less than two hundred feet (200') or more than three hundred fifty (350') feet.
4. Intersection Lighting: All arterial-to-arterial and signalized intersections shall have four (4) streetlights. All other intersections require two (2) streetlights except Local to Local and in some cases, as determined by the City, 2-Lane Collector to Local, which shall have one (1) streetlight. Knuckles require one (1) streetlight.

C. Historic Globe Street Light Luminaries

1. Standard Details:
    a. Historic streetlights shall be Sternberg 4200 Augusta Series – 4208 TFP4 (Ten (10') feet tall, four (4") inch tapered Fluted cast aluminum-extruded poles) or approved equivalent.
    b. Multi tapped 120-240 voltage ready.
    c. All lamps for historic globe street light systems shall be 70-watt HPS incandescent lamps.
    d. Eight (8') foot poles are 4208 TFP5 – Verde Green; Globe – A840, 70 watt HPS.
    e. Ten (10') foot poles are 5210 TFP – RE5Q and Alzak FH/DBA/Black; Globe – B750, 70 watt HPS-MT.
2. Location and Spacing:

a. Lights shall be placed on alternating sides of the roadway at approximately seventy five (75') foot intervals.
b. Lights shall be used in designated historic districts only as defined by the Historic Globe Street Light Overlay District Map.
c. Light spacing shall be such that at least one (1) streetlight is placed in close proximity of any roadway intersection (within five (5') feet of the back of curb return or edge of curb return). At larger intersections with collector-to-collector or arterial to collector street classifications, two lights shall be placed diagonally opposite to one another (within five (5') feet of the back of curb return or edge of curb return).
d. In some cases, cobra head streetlights may be required at intersections requiring higher levels of safety lighting.

7.15.6 Traffic Signals

This section shall present the criteria and procedures to be utilized by consultants when performing traffic signal work in and for the City of Cottonwood.

A. Traffic Signal Spacing:

Street Intersection Spacing on State Highways and Arterials:

1. Minimum one half (½) mile spacing shall be required for all warranted traffic signal intersections on all state highways, parkways and major arterial in all cases, except where subject to a highway access management plan or as otherwise approved by ADOT. Consideration for intersection spacing as close as one quarter (¼) mile may be considered through the EDSM, Article 10, process. Recorded easements for shared access, provision of acceleration/deceleration lanes, traffic signals and other right of way improvements, for these cuts may be required prior to approval.
2. Minimum one quarter (¼) mile spacing shall be required for all warranted traffic signal intersections on Arterials, 3-4 Lane Collectors, and 2-Lane Collectors in all cases. Consideration for intersection spacing as close as one quarter (¼) mile to six hundred sixty (660') feet may be considered to provide required access through the EDSM, Article 10, process. Recorded easements for shared access may be required prior to approval. Adjoining parcels under common ownership may be required to share a curb cut.

B. Traffic Signal Design Guidelines:

The following publication most recent editions and approved supplements by the State and City of Cottonwood are to be used in conjunction with the design criteria when designing traffic signals for the City of Cottonwood.

1. Manual on Uniform Traffic Control Devices for Street and Highways; USDOT/FHWA
2. Traffic Signals and Lighting (Standard Drawings); ADOT
3. ADOT Standard Specifications for Road and Bridge Construction

4. International Signal Association Specifications
5. Equipment and Materials Standards of the Institute of Transportation Engineers

C. Controllers and Cabinets:
1. Control cabinet shall be type IV Econolite TS2, Type 1 with elevator base.
2. Meter Pedestal Cabinet shall be Myers PBM 2000 or 1250 UPS w/ foundation or approved equal.
3. Provision for battery backup shall be provided in all traffic signal cabinets.

D. Emergency Vehicle Preemption:
Emergency vehicle preemption shall be installed at all traffic signal intersections. A complete installation to include Opticom 700 series system, sensors, processors and confirmation hardware or approved equal shall be used.

E. Loop Detectors:
Loop detector shall be six (6') feet by fifty (50') feet quadrupole unless otherwise specified by the City Engineer and shall conform to the current ADOT Traffic Signals and Lighting Standard Drawings.

F. Pedestrian Signal Indications:
Provide pedestrian signals at vehicular signal locations. Install crosswalks at intersections, when sidewalk connections exist, or are installed. Pedestrian indications shall be LED countdown style with accessible pedestrian push buttons provided.

G. Pole and Head Location:
Traffic signal pole and head locations shall conform to the MUTCD; and direction of the City Engineer.

H. Street Light Luminaries:
All traffic signal installations shall include streetlights on all mast arm equipped poles consistent with the requirements of EDSM, Section 7.13.4 "Cobra Head Street Light Luminaries".

I. Pull Boxes:
Traffic signal pull boxes shall be No. 7, signal interconnect pull boxes shall be No 5, with locking lid and labeled "TRAFFIC SIGNAL" and shall conform to T.S. 1-4, 1-5, and 1-6 of the ADOT Traffic Signals and Lighting Standard Drawings.

J. Traffic Signal Conduit:
Traffic signal conduit shall be three (3") inch Schedule 40 PVC.

K. Traffic Signal Interconnect:
Traffic signal interconnect conduit shall be installed along all arterial roadways and at other locations as directed by the City Engineer per COP Standard Detail 640P to extend the existing interconnect systems.
1. Conduit shall be two (2") inch Schedule 40 PVC
2. Interconnect cable shall be 6-pair, filled 19-gauge solid, run un-spliced.

L. Traffic Signal Plan Checklist:
The Traffic Signal Plan Checklist shall be used as a guide to ensure that all of the basic elements are included in the traffic signal plans. Any signal plan that does not include each of the basic elements included on the checklist shall be returned for revision and resubmittal.

7.16 SIGNING

7.16.1 Signing

In new development, the applicant shall install all traffic control signs, which shall include but not be limited to street name, parking, stop, warning, dead end and pedestrian signing. The applicant shall be responsible for supplying and installing the required signs, posts and hardware in accordance with the required standard plans and specifications.

7.16.2 Sign Design Guidelines

The following publications most recent editions and approved supplements by the State and City are to be used in conjunction with the design criteria when designing traffic signing for the City of Cottonwood.

A. Manual on Uniform Traffic Control Devices for Street and Highways (MUTCD); USDOT/FHWA
B. City of Cottonwood Standard Specification
C. City of Cottonwood Standard Details
D. Manual of Approved Signs (ADOT)
E. American Association of State Highway Transportation Officials (AASHTO)

7.16.3 General Signing Guidelines

A. All signing shall conform to the most recent editions of the publications shown above with regard to size, color, shape and placement.
B. All signs shall be new other than those shown on the plan to be relocated. All new and relocated signs shall be mounted on new posts with new hardware. Signs designed for installation on existing street light poles shall be mounted with new hardware.
C. Traffic sign dimensions, colors and lettering shall conform to the latest MUTCD specifications. Traffic sign size shall be standard unless otherwise specified here or on the plans.
D. All signs shall be located at least one (1’) foot from the curb face to the nearest edge of the sign. All other roadways signs shall be mounted from six (6’) feet to twelve (12’) feet from the edge of the pavement to the nearest edge of the sign.
E. Roadways with guardrail signs shall be located at least six (6’) feet from the face of the guardrail to the nearest edge of the sign.
F. Sign location shall be coordinated with landscaping plans to ensure sign visibility per AASHTO standards.
G. Signs shall be mounted on street light poles whenever feasible.
H. All signs installed in areas where parking or pedestrian movements occur shall be erected at a height of seven (7’) feet above the pavement or sidewalk to the bottom of the sign or to the lowest sign in a multiple sign installation assembly with the following exceptions:
    1. The height to the bottom of a secondary sign mounted below another sign may be up to one (1’) foot less than the height specified above in rural areas where pedestrians are not expected.

2. Object markers shall be installed at least four (4') feet above the pavement.

I. All R1-1 "STOP" signs and pedestrian warning signs shall be retro-reflective with all sheeting material to be diamond VIP grade, meeting or exceeding ASTM 4956-04.

J. All other signs are to be retro-reflective with all sheeting material to be high intensity prismatic meeting or exceeding ASTM 4956-04.

K. Sign blanks shall be 5052-H38 alloy treated aluminum with Alodine 1200 conversion coating, 0.080" thick with rounded corners.

L. Stop signs are to be shown at all local street intersections within a subdivision unless an engineering study shows that no control or yield control is warranted. Stop signs shall be designed and shown on the minor leg of all collector and non-signalized arterial street intersections.

M. "STOP" signs and "YIELD" signs shall be a minimum of thirty (30") and thirty six (36") inches in width, respectively. When specified by the requirements of the MUTCD, thirty six (36") inch and/or forty eight (48") inch signs may be required on major collectors and arterial streets.

N. At intersections where all approaches are stop controlled, "All Way" placards shall be placed below the R1-1 stop signs.

7.16.4 Sign Posts

A. Sign posts shall conform to COC Standard Detail 1131.

B. For new construction the Telspar, Uni-strut or approved equal twelve gauge, galvanized steel, four (4) sided perforated square tubing is required. Two (2") inch tubing shall be used for smaller signs while two and one half (2 ½") inch tubing shall be used for the larger signs.

C. The post shall be tall enough to provide the minimum clearances specified in the EDSM, Section 7.16.3 H.

D. The base and sleeve system for the sign shall be anchored in a minimum of a twenty four (24") inch deep, twelve (12") inch diameter foundation of concrete. The base shall have a breakaway slip base system. The exposed post from the base shall be four (4") inches to six (6") inches high.

E. Signs over forty eight (48") inches wide shall be mounted on two (2), two and one half (2 ½") inch posts with a horizontal support frame.

7.16.5 Street Name Signs

A. Street name signs shall conform to COC Standard Detail 1132.

B. All reflective sheeting material shall be high intensity prismatic, meeting or exceeding ASTM 4956-04.

C. All transparent acrylic, pressure-sensitive film shall be 3M#177 green electro cut film or approved equal.

D. Letter font shall be uppercase four (4") inch minimum with the block numbers in the 100's with a directional arrow.

E. These signs are constructed by applying white sheeting to the entire blank. On top of this sheeting, a green translucent pressure-sensitive film from which the legend has been cut and removed is applied.

Thus, the green background is applied on top of the white sheeting resulting in a sign with a white legend and a green background.

F. Signs that are located in the center of the block shall have " ← → ".
G. Signs that are at the beginning and end of the block have " → " pointing up the block.

7.16.6 Low Water Crossing Gates

A. Gates shall be required on all new low water crossings.
B. Two hundred (200') feet prior to the low water crossing gate a thirty six (36") inch by thirty six (36") inch black on yellow warning sign shall be posted on each approach that reads "Flood Area Do Not Enter When Flooded".
C. Black and yellow object marker (OM-3R(L)) shall be mounted on all four (4) corners of the gate facing traffic.
D. When the gates are closed, a "Road Closed" (R11-2) shall be affixed to the gate facing oncoming traffic. To the left of the R11-2 sign, in the left most lane shall be affixed to the gate a red on black nine ball (OM4-2).
E. Knox padlocks will be required on all low water crossing gates.

7.16.7 End of Road Delineators

A. Two types of end of road barriers can be used. These are a modified MAG Standard Detail 130.
    1. Type A is constructed of two (2) treated four (4") inch by four (4") inch redwood posts sunk in the ground thirty six (36") inches and four (4') feet apart, extending to a height of five (5') feet. Three (3), eight (8") inch minimum, twelve (12") inch maximum by six (6') footboards shall be mounted horizontally twenty (20") inches on center between the posts. The boards shall be painted in a chevron design, black and yellow. Starting in the middle of the board the chevrons shall slope to both sides. Attached to the center board shall be a thirty six (36") inch by thirty six (36") inch black on yellow warning sign with the words "Road Closed".
    2. Type B is a smaller version of Type A. The two (2) treated four (4") inch by four (4") inch posts shall be five (5') feet apart and extend three (3') feet above ground. One horizontal board shall be attached at the three (3') foot level. On the board will be the same color scheme, chevrons and sign as Type A.
    3. In all cases in which a road closure is greater than one hundred fifty (150') feet from the nearest street intersection or the roadway alignment obscures the closure, pre-warning signs shall be required and placed as directed by the City Engineer.

7.16.8 Signing Plan Checklist

The Signing Plan Checklist shall be used as a guide to ensure that all of the basic elements of a project signing and striping plan are included in the signing plans. Any signing plan that does not include each of the basic elements included on the checklist shall be returned for revision and resubmittal.

7.17 STRIPING

7.17.1 Striping

New plats and developments shall install all striping and pavement legends as determined by the City Engineer, which shall include but not be limited to lane lines, crosswalks, stop bars legends, and arrows. The applicant shall be responsible for supplying and installing the required striping in accordance with standard plans and specifications.

7.17.2 Striping Design Guidelines

A. The following publications' most recent editions and approved supplements by the State and City are to be used in conjunction with approved design criteria when designing striping for the City of Cottonwood.
    1. Manual on Uniform Traffic Control Devices for Street and Highways (MUTCD); USDOT/FHWA
    2. City of Cottonwood (COC) Standard Details
    3. American Association of State Highway Transportation Officials (ASSHTO)

B. General Striping Guidelines
    1. Striping shall conform to the most recent editions of the MUTCD specifications with regard to size, color, reflectivity and placement unless otherwise specified here.
    2. All roadways classified as Collector or higher shall require centerline striping, stop bars, crosswalks and other appropriate legends and arrows. Local streets are normally exempt.
    3. All thermoplastic applications shall conform to ADOT specification 704. Transverse markings, symbols and legends shall be 90 mil (0.090 inch) thick, longitudinal markings shall be 60 mil (0.060 inch) thick alkyd extruded thermoplastic.
    4. All paint application shall conform to ADOT specification 708.
    5. All conflicting striping, pavement markings, and curb paint shall be removed by wet sandblasting or other approved method prior to the installation of new striping. Slurry or paint shall not be used to cover existing paint. Pavement that is damaged due to the removal of markers or striping shall be repaired to the satisfaction of the City Engineer.
    6. Through lanes shall be a minimum of twelve (12') feet in width, with the exception that lane(s) of eleven (11') feet minimum are used on the center lane of a Major Arterial street, per COC Standard Detail 1606.
    7. Turn lanes shall equal that of the through lanes but shall be at least ten (10') feet wide.
    8. Parallel parking lanes adjacent to the curb with a gutter pan shall be a minimum of five (5') feet in width from the edge of gutter.
    9. A maximum of two (2') foot offset in the lane striping through an intersection is acceptable.
    10. All skip lane lines and edge of road markings shall be four (4") inches in width unless otherwise specified.
    11. Four (4") inch solid white edge lines shall be used on streets that do not have curb and gutter.

12. All skip white or yellow road markings shall be a ten (10’) foot stripe with a thirty (30’) foot gap (forty (40’) foot repeated interval).
13. Crosswalks shall normally be twelve (12”) inches in width and shall be installed as shown in COC Standard Detail 1630 and 1631.
14. Stop bars shall be eighteen (18”) inches wide and set back two (2’) feet from the crosswalk, or in the absence of a crosswalk placed at the desired stopping point. They are required at all intersection locations where crosswalks are used and at all stop controlled intersections on streets classified a Collector and higher. Additionally stop bars are required at all Local street intersections that intersect streets classified a Collector and higher.
15. Dual turn lanes shall require the installation of lane delineation markings, which shall consist of white six (6”) inch wide thermoplastic skips placed in a two (2’) foot stripe with a four (4’) foot gap pattern.

C. Crosswalks

Crosswalks shall be required at all legs of signalized intersections and roundabouts and may be required at other locations in yellow or white, standard or high visibility types as determined by the City Engineer. Refer to COC Standard Detail 1630 and 1631.

1. A white twelve (12”) inch transverse crosswalk shall be used at all designated pedestrian crossings that require the minimum visual treatment.
2. A white crosswalk with twelve (12”) inch diagonal and longitudinal marking shall be used on collector streets with higher volumes to provide increased visibility to drivers. This will result in a more noticeable pavement marking than the standard white crosswalk.
3. A white crosswalk with twenty-four (24”) inch transverse and twelve (12”) inch longitudinal markings provides the highest visibility to drivers and shall be used on arterial streets with the greatest volumes, requiring a more noticeable pavement marking than the diagonal white crosswalk.
4. A yellow crosswalk with twelve (12”) inch transverse and optional diagonal markings shall be used at designated school crossings. Its twelve (12”) inch wide diagonal markings help to provide increased visibility to drivers and is the standard school crossing on streets with lower volumes.
5. A yellow crosswalk with twenty-four (24”) inch transverse and twelve (12”) inch longitudinal markings shall be used at designated school crossings on streets classified as Major Collector and higher, requiring a more noticeable pavement marking than the diagonal yellow crosswalk.

D. Speed Hump Markings

Speed humps shall be striped in accordance with the COC Standard Detail 1210. The markings shall be white extruded or precut thermoplastic (90-mil thickness).

E. Bike Lane Marking

1. Bike lanes shall be installed in accordance with the most recent version of the Bicycle and Pedestrian Plan as adopted by the City Council and marked per COC Street Typical Sections and the MUTCD Part 9.
2. Bike lane symbols shall be installed as part of on-street bike lane striping at the beginning of each block and at a spacing of six hundred (600') feet thereafter in the absence of intersecting streets.
3. Bike lane striping lines shall be six (6") inches in width, solid white unless otherwise specified.
4. Bike lanes shall be a minimum of four (4') feet in width when placed adjacent to the lip of gutter and five (5') feet in width when placed between a travel lane and a parking aisle.

7.18 GUARDRAIL

All new developments shall provide for the design and construction of guardrail as determined by the warrants, procedures and policies in the AASHTO Roadside Design Guide. In areas where short sections of guardrail are warranted the developer shall design and construct additional length sufficient to ensure that the guardrail system has collective post strength to resist failure or total displacement of the system.

ARTICLE 8: DRY UTILITIES

8.1 GENERAL INFORMATION

8.1.1 Purpose

The purpose of this section is to provide guidelines for location and installation of private utilities within dedicated City Right of Way (ROW), private streets and Public Utility Easements (PUE). This section also provides criteria to integrate private utilities with City water and sewer.

8.1.2 Applicability

This Article will identify the minimum criteria for design, permitting, construction and installation of private utilities in dedicated City ROW, private streets and PUE.

8.2 PRIVATE UTILITIES

8.2.1 Franchise Agreements

A. Franchise Agreements are currently in effect with the following utility providers:

- Power – Arizona Public Service Company (APS)
- Natural Gas – Unisource Energy
- Cable TV – Cable One
- Telephone – Century Link

All franchise agreements are on file in the office of the City Clerk and may be reviewed upon request.

B. Availability of Private Utilities

The property owner, developer or contractor shall be responsible for contacting private utility companies regarding the availability of services for private development.

8.3 DEDICATION OF PUBLIC UTILITY EASEMENTS

The developer shall dedicate all public utility easements necessary to provide utility service to and through the proposed project. All Public Utility Easements (PUE) shall be recorded on the plat, survey or by separate instrument in the office of the Yavapai County Recorder.

8.4 BLUE STAKE NOTIFICATION (ARIZONA 811)

A Blue Stake notification shall be placed on each sheet of the plans. Prior to excavation in the City Right of Way (ROW) or Public Utility Easement (PUE), the contractor shall call Blue Stake (1-800-STAKEIT or 811) for location of all underground utilities.

8.5 UNDERGROUND CONFLICTS

New and existing private utilities within a proposed development shall be placed underground. Transformers, switching cabinets, terminal boxes and 69 KV power transmission lines or larger may be placed above ground, within the Public Utility Easement (PUE). Other locations will require the approval of the City Engineer.

8.6 CODE CONFLICTS

City of Cottonwood Municipal Code (CMC), Cottonwood Zoning Ordinance (CZO), Cottonwood Subdivision Ordinance (CSO), and Maricopa Association of Governments (MAG) may also apply to the installation and construction of private utilities. If a regulatory conflict exists, the code, which is most restrictive, shall apply.

8.7 CONFLICT REVIEW

A. Private Utilities located within the Public Utility Easement (PUE) or crossing City ROW will require a conflict review by the City Public Works/Engineering Department prior to the issuance of a Right of Way Permit.
B. Construction plans for private utility facilities located within City ROW, Private Street or PUE must be submitted to Public Works/Engineering Department for review and approval to ensure that the integrity and minimum separation of both the public and private utilities is maintained.

8.8 PLAN REQUIREMENTS & GUIDELINES

The plans submitted shall conform to the CADD mapping standards. The City reserves the right to reject the plans as submitted by the private utility company. It is recommended that a meeting be scheduled with the City to review requirements. Minimum standards of the plans shall meet the following:

A. Identify and dimension all existing and/or proposed utilities in the City Right of Way (ROW) and Public Utility Easement (PUE).
B. Show all existing rights-of-way and/or proposed PUE(s).
C. Show existing and/or proposed street improvements. (e.g. pavement, curb, gutter, sidewalk, driveways, street light poles, water meters, fire hydrants, traffic signals and signal cabinets).
D. Identify and dimension all existing and/or proposed City of Cottonwood public utilities. (e.g. water, sewer, drainage and streetlights). To avoid conflict, underground utilities shall be shown on the profile with depth elevations and stationing. Profile shall be on the same sheet as the plan view, aligned with the matching station. Utilities may have different stationing, in this case reference the corresponding street station. The nearest City of Cottonwood monument shall be referenced.
E. Identify and dimension all underground and above ground facilities including those owned by other providers within the City ROW or PUE.
F. Plans shall be a minimum sheet size of 11” x 17” and a maximum size of 22” x 34”. Refer to the City of Cottonwood CADD standard for right of way.
G. Minimum separation between non-city private utilities and City of Cottonwood public utilities is four (4’) feet horizontal, and two (2’) feet vertical in accordance with COC Standard Detail 1402.
H. Submit three (3) bond sets of plans to City Hall including a traffic control plan in accordance with MUTCD along with the right-of-way application for review by the Public Works/Engineering Department. A traffic control plan must be approved by the City Engineer.

8.9 PERMIT REQUIRED

Prior to issuance of a permit to allow the excavation and installation of private underground utilities (e.g. power, telephone, natural gas, cable TV and fiber optic) in any City Right of Way (ROW), private street or Public Utility Easement (PUE), the developer or contractor installing underground private utilities shall apply for and receive a Right of Way Permit from the Public Works Department. The permit request shall include construction plans and a Traffic Control Plan. All work performed as part of the Right of Way Permit shall conform to the requirements of this section.

8.10 COMMON TRENCH & LOCATIONS

A. On local streets, private utilities, except natural gas, shall be located in a common trench on the side of the street without sidewalk, behind the curb and within the Public Utility Easement (PUE). Exceptions to using a common trench and location would require approval by the City Engineer. Refer to COC Standard Detail 1402 for typical minimum clearances of City and private utilities.

B. On collector and arterial streets, with sidewalks on both sides of the street, private utilities, except natural gas, shall be located in a common trench behind the sidewalk and within the PUE, on the side of the street with the least conflict with City utilities. Exceptions to using a common trench and location would require approval by the City Engineer. Refer to COC Standard Detail 1402 for typical minimum clearances of City and private utilities.

C. Natural gas shall be located in a separate trench within the City ROW, PUE or private streets on the opposite side of the street of the other private utilities. Exceptions to this location would require approval by the City Engineer. Natural gas may be placed in a common trench with other utilities, with written approval from all utility franchisees within the City.

D. Trench and backfill for all underground private non-city utilities shall conform to MAG Standard Details 200-1 and 200-2.

8.11 MINIMUM CLEARANCES

All proposed private utility facilities shall maintain the following minimum clearances between City of Cottonwood utilities: Refer to COC Standard Detail 1402.

- Horizontal – Four (4’) feet
- Vertical – Two (2’) feet

8.12 PAVEMENT CUTS

A. There shall be no open trenching (pavement cut) on public streets with paved surfaces less than five (5) years old.

B. Open trenching (pavement cut) is allowed on streets with paved surfaces that are a minimum of five (5) years old. Backfill and pavement replacement shall conform to MAG Standard Details 200-1 and 200-2.

C. Pavement patching for the street cuts shall be made within twenty four (24) hours of completion of work as specified on MAG Standard Details 200-1 and 200-2.

D. Depending on condition of existing pavement, additional removal and replacement of pavement wider than the trench may be required. When the trench of any lineal utility project is within three (3') feet or less from lip of gutter, the pavement area between the trench and lip of curb will also require full removal and replacement. Pavement replacement shall be the minimum structural section for said street classification. In no case shall the replacement of existing asphalt be less than three (3") inches asphaltic concrete (AC) over six (6") inches aggregate base course (ABC) (the minimum residential section). In addition should any raveling or damage occur to the existing pavement within the construction area, the damaged areas shall be saw cut, removed, and replaced. Damage to curb, gutter and sidewalk shall require full panel removal with saw cuts made at each joint. Removal and replacement of any and all existing infrastructure, damaged pavement, concrete, landscaping and irrigation, etc. shall be at the contractor's or private utility's expense.

8.13 HORIZONTAL BORES

In lieu of pavement cuts, developers and contractors may use boring and jacking. Designs with pavement boring shall include a boring profile to insure proper separation is maintained from all existing utilities. Profiles of existing shall be potholed prior to start of work and included on the boring profile. Utility potholes shall remain open with plate at critical crossings to visually verify depth of bore and avoid utility conflicts.

8.14 DRY UTILITIES CHECKLIST

A. Dry Utility Plan sheets shall be submitted in accordance with the Engineering Design Standards Manual (EDSM), Article 9. Plans shall provide at a minimum the following:
    1. Property lines;
    2. Right of Way (ROW) lines;
    3. All recorded and proposed public utility easement(s) (PUE(s));
    4. Identify and dimension all existing and proposed private utilities;
    5. All existing and proposed infrastructure including curb, gutter, sidewalk, pavement, water, water meters, fire hydrants, wastewater, drainage culverts and catch basins, street light poles, traffic signals, signal cabinets; and
    6. Traffic Control Plan

ARTICLE 9: SURVEY

9.1 INTRODUCTION

9.1.1 Purpose

The intent of this section is to ensure all projects that involve topographic, boundary, control, as-built, and ALTA surveys; aerial mapping survey ground control; construction staking; right of way and easement investigation; preparation of legal descriptions and exhibits; and improvement plans will apply consistent methods and standards pertaining to ground surface measurement within the City of Cottonwood.

9.1.2 Applicability

All survey work in the City of Cottonwood will be performed under the direction of a professional land surveyor registered in accordance with requirements of the State of Arizona Board of Technical Registration at http://www.btr.state.az.us/ .

9.1.3 Statement of Intent with regard to Digital Data

The City of Cottonwood requires digital CADD data for all submittals. It is the City's intent to use this base form data in-house to benefit the public by updating GIS models, City Survey Models, and As-Built Records with increased accuracy and efficiency. The City shall not release proprietary CADD format digital information in base form without the consent of the design engineer or registered land surveyor. The City shall have the right to release IMAGE files of plan set data to the public as public record information in the same way that hard copy plan files are released.

9.1.4 Geographic Information System (GIS) Technology

The City is using GIS technology for capturing, managing, analyzing, and displaying all forms of geographically referenced data and information. GIS data submitted to the City shall comply with the Arizona Spatial Data Accuracy and Geo-Referencing Standards available from Arizona Professional Land Surveyors (APLS).

9.2 LAND SURVEYING

9.2.1 Boundary Survey Standards

A. Boundary Surveys: All land survey work will be performed within the guidelines of the Arizona Boundary Survey Minimum Standards. These standards may be obtained from the State of Arizona Board of Technical Registration at 1110 West Washington Street, Suite 240, Phoenix, Arizona 85007, or online at: https://btr.az.gov/laws-standards/standards/standards.

B. ALTA Surveys: ALTA surveys will be based on American Land Title Association, American Congress on Surveying & Mapping, and National Society of Professional Surveyors, latest edition, Minimum Standard Detail Requirements for ALTA/ACSM Land title Surveys: http://c.ymcdn.com/sites/www.nsps.us.com/resource/resmgr/ALTA_Standards/20110223ALTAACSMLandTitleSur.pdf?hhSearchTerms=%22minimum+and+standard+and+detail+and+alta%2facsm%22.

9.2.2 Horizontal & Vertical Control System

A. Survey Datum Requirements. When submitting survey data for engineering plans that are to be submitted to the City of Cottonwood (i.e.: capital improvement projects, final plat, preliminary plat and revision of plat, improvement plans for subdivision and commercial site improvements, as-built plans, etc.) the data must meet the following survey datum requirements:
    1. Units of measure shall be in international feet for horizontal and vertical coordinates, North American Vertical Datum of 1988 (NAVD88) for vertical, and City of Cottonwood coordinates for horizontal. Only City of Cottonwood Coordinates will be accepted. Please refer to Table 9-1.
    2. A survey block or note listing at least two on-site points conforming to "City of Cottonwood Survey Datum Requirements" must be provided. These two points must have a Northing, Easting and a NAVD88 elevation.
    3. Centerline monuments shall be at all Points of Curvature (PC), Points of Tangency (PT) and intersections for horizontal curves. Right of Way monuments should be a rebar in concrete at PC's, PT's and angle points. Refer to COC Standard Detail 1120 entitled, "Survey Marker."
    4. All plats shall be submitted in digital CADD format on the City of Cottonwood Datum as set forth herein for City of Cottonwood review at the preliminary submittal stage, as well as for final plat acceptance.
    5. All CADD files shall be on a single disk media in AutoCAD (a release currently supported by Autodesk subscription plans). CADD files shall consist of base/design files on the city coordinate system to include, but not limited to the following: Topography, Right of way, Sewer, Water, Drainage, Grading, Typical sections, etc. All deliverables to include, but not limited to the following: General, Civil, Sewer, Water, Standard Details, etc. Also, include a PDF file of all deliverables. All CD/DVD's shall be labeled with the project name, company name, contact name, phone number, and the City of Cottonwood Project number.

9.3 BENCHMARKS

9.3.1 Benchmark Reference

All civil engineering design plans must reference on the cover sheet the published NGS monument and City of Cottonwood benchmarks used for vertical control. Description and elevation in the required NAVD88 datum shall be shown.

9.3.2 Plan Datum Reference

All civil engineering design plans shall contain a statement certifying the horizontal and vertical datum used for all horizontal locations and elevations, which are represented in the plans. The statement shall be included on the cover sheet immediately below the benchmark.

9.3.3 Current Datum

Published City of Cottonwood Benchmarks which reference the National Geodetic Vertical Datum of 1929 (NGVD29) are no longer acceptable for vertical control.

TABLE 9-1: SURVEY DATUM REQUIREMENTS

CITY OF COTTONWOOD SURVEY DATUM REQUIREMENTS	
COORDINATE UNITS:	International Feet
DISTANCE UNITS:	International Feet
HEIGHT UNITS:	International Feet
DATUM	
GEODETIC (HORIZONTAL) DATUM:	North American Datum of 1983 (2011)
COORDINATE SYSTEM:	Arizona Coordinate System (State Plane)
ZONE:	Arizona Central (0202)
VERTICAL DATUM:	North American Vertical Datum of 1988 (NAVD88)
GEOID MODEL:	GEOID99 (Conus)

[This Page Intentionally Left Blank]

ARTICLE 10: ALTERATIONS & MODIFICATIONS

10.1 INTRODUCTION

10.1.1 Purpose

A. The purpose of this Article is to provide guidance to those seeking a formal request to allow an alteration or modification of the adopted Engineering Design Standards Manual (EDSM) and City of Cottonwood supplement to MAG Specifications and Standard Details. This article outlines submittal guidelines, processing timelines for review, fees and the decision and appeal processes for all types of alternations or modification requests. There are three types of alterations or modifications.
   1. Administrative Alteration or Modification
   2. Technical (Minor) Alteration or Modification
   3. Design (Major) Alteration or Modification

B. The most appropriate time to submit a formal alteration or modification to the engineering standards request is in the preliminary stages of a project's development, in order to avoid delays to the project. Once an applicant decides to move forward with the formal request for an engineering standards alteration or modification, the applicant must follow the process outlined.

C. Submittal of the formal request for an alteration or modification of the engineering standard does not guarantee approval. Therefore, if the applicant proceeds with design prior to City staff providing a written determination on the deviation, is at the applicant's own risk.

D. While a request is under review, the plan review for the project will be placed on an administrative hold until the requested alteration or modification has been completed.

10.1.2 Qualification Criteria

A. For an engineering standards alteration or modification request to be considered, the applicant must demonstrate that there is a unique property condition causing substantial hardship. In order to qualify for an engineering standards deviation request, the following criteria must be true:
   1. There are unique conditions or circumstances applying to the use of the subject property in regards to:
      a. Lot size or shape
      b. Topography
      c. Access control
      d. Drainage patterns
      e. Distance to nearest Water Service
      f. Distance to nearest Sewer Service
      g. Unusual utility conflicts
   2. The condition causing hardship was not created by the applicant, owner, or any previous owner of the property. The property hardship cannot be self-imposed.
   3. Without the granting of the alteration or modification, the property cannot be reasonably used.

4. Certification that the alteration or modification will not be materially detrimental to persons residing or working in the vicinity, to the adjacent property owner, to the neighborhood, or public welfare in general.
5. State or Federal requirements or standards cannot be altered or modified by the City

B. It is the burden of the applicant to prove all of the above criteria true. If all of the above criteria can be proven, the Engineer of Record should contact the Public Works Department to discuss the feasibility of applying for an alteration or modification.

C. In no case shall economic hardship qualify as criteria for evaluating an engineering deviation.

10.2 ALTERATIONS OR MODIFICATION PROCESS

10.2.1 Submittals

When deemed appropriate, the design engineer/applicant shall prepare a formal submittal to request consideration of an alteration or modification of the adopted Engineering Design Standards Manual.

10.2.2 Application & Documents

A. All requests for alterations or modifications to Engineering Design Standards Manual shall be submitted on a Public Works, "Engineering Design Standards Manual Alteration/Modification Application". Applications shall be filled out completely with the printed name and signature of the current property owner and/or agent, as applicable.

B. All requests for Alteration or Modification to Engineering Design Standards Manual shall be made with the first submittal or as soon as the issue is identified.

C. In addition to the Engineering Standard Manual Alteration/Modification Application, the submittal shall include:
    1. A narrative describing the project, the proposed modification, justification for the request as defined in the EDSM, Article 10.1.2 and the section of the Engineering Design Standards Manual, which relates to the modification request.
    2. A site plan and an engineered plan signed by the registered professional for the proposed project.
    3. Specific engineering analysis needed by staff to complete the evaluation of the request to include but not be limited to, traffic studies, drainage studies, water and sewer design reports, geotechnical studies, bridge reports, structural reports, typical sections, cross sections and alternative designs.
    4. Should additional information be necessary to clarify or facilitate the review of an application, the City may request any other pertinent information deemed necessary, regardless of items already submitted for other review processes.

D. A complete application, technical documents and fees may be submitted to the Engineering Department center at 1490 W. Mingus Ave., Cottonwood, AZ 86326.

E. Application for Alteration or Modification to Engineering Design Standards Manual may be submitted prior to or with the underlying development application.

F. The City Engineer shall determine the classification for each alteration or modification request (i.e. Administrative Modification, Technical (Minor) Modification or Design Standard (Major) Modification) based upon the complexity of the request. The City Engineer may modify the classification after reviewing the submittal.

10.2.3 Application Completeness

A. An application submittal shall be deemed complete only after the City Engineer reviews the application, including all required or requested information and exhibits.

B. The City Engineer shall make a determination of application completeness within three (3) working days of the submittal.

   1. If an application is determined to be incomplete, the City Engineer will contact the applicant to explain the application's deficiencies and return the incomplete submittal.
   2. No further processing of the application shall occur until the required submittal elements are provided.
   3. If the deficiencies are not corrected by the applicant within thirty (30) calendar days of notification, the application shall be considered withdrawn.

10.2.4 Justification for Request

A. City staff shall evaluate the alteration or modification request and reach a determination based upon the information submitted and the criteria listed below:

   - Public Safety (No deviation will be granted which compromises the public's safety)
   - Function
   - Traffic Management
   - Durability/Reliability
   - Cost of Operations and Maintenance to the City
   - Water and Sewer Service availability
   - Environmental Quality
   - Storm Water Quality
   - Appearance
   - Zoning Ordinance/Subdivision Ordinance/City Code
   - Quality of Life
   - Other appropriate factors that may contribute to the council goals for the planning and development of the City

B. Self-imposed conditions or economic hardship shall not be used as justification to grant an alteration or modification.

10.2.5 Fees

Alteration/Modification submittals shall be accompanied by the payment of a fee. Submittals without the fee will not be accepted. Fees shall be collected in accordance with the most recent fee schedule adopted by the City Council. If an application is denied or withdrawn, the fee payment is non-refundable.

Administrative Alteration/Modification	$100.00
Technical Alteration/Modification	$250.00
Design Standard Alteration/Modification	$250.00
Appeal Fee	$75.00

10.2.6 Evaluation

The technical evaluation of the alteration or modification request, once deemed complete, will be completed within the period of time specified in EDSM, Section 10.3, 10.4 or 10.5. If the evaluation is expected to take longer than specified timeframe, the applicant will be notified at the time of acceptance of the application.

10.3 ADMINISTRATIVE ALTERATION OF MODIFICATION

Administrative alterations or modifications are defined as a modification involving minor aspects of a particular standard that do not materially affect the functionality of the standard.

10.3.1 Review Procedure

Within five (5) working days of the determination of application completeness, the City Engineer shall:

A. Review and evaluate the request in light of the Engineering Design Standards Manual and other relevant information.
B. Consult with other staff, as necessary.
C. Render a decision to grant or deny the request.

10.3.2 Written Determination

Within five (5) working days of the determination of application completeness, the City Engineer will provide a written decision in response to the application.

10.4 TECHNICAL (MINOR) ALTERATION OR MODIFICATION

Technical (Minor) Alteration or Modification is defined as a modification involving aspects of a particular standard that may change its general function, but not its essential function.

10.4.1 Review Procedure

Within ten (10) working days of the determination of application completeness, the City Engineer shall:

A. Review and evaluate the request in light of the Engineering Design Standards Manual and other relevant information.
B. Consult with other staff, as necessary.
C. Render a decision to grant or deny the request.

10.4.2 Written Determination

Within ten (10) working days of the determination of application completeness, the City Engineer will provide a written decision in response to the application.

10.5 DESIGN ALTERATION OR MODIFICATION

Design (Major) Alteration or Modification is defined as a modification from the Engineering Design Standards Manual substantial enough to affect the essential function of the standard. Examples include but are not limited to:

- Sight Distances
- Vertical and Horizontal Alignments
- Street Grades
- Geometric Design (length, width, bulb radius, medians, etc.)
- Design Speed Variances
- Pavement Widths
- Crossroad Circulation
- Offset Cross Street Alignments
- Access Policy and Cross Circulation Requirements
- Surface Materials
- Asphalt or Base Course Thickness
- Rolled Curb versus Straight Curb

10.5.1 Review Procedure

Within fifteen (15) working days of the determination of application completeness, the City Engineer shall:

A. Review and evaluate the request in light of the Engineering Design Standards Manual and other relevant information.
B. Consult with other staff, as necessary.
C. The City Engineer may obtain an independent review by a design professional with expertise in the area of the request, if deemed necessary. An additional fee may be required and a possible extension of review time may apply.
D. Render a decision to grant or deny the request.

10.5.2 Written Determination

Within fifteen (15) working days of the determination of application completeness, the City Engineer will provide a written decision in response to the application.

10.6 GENERAL CONDITIONS

A. The alteration or modification of the same standard may not be submitted for evaluation more than once on the same project site.
B. Although alteration or modification requests can be submitted until the point which construction plans are approved, any additional plan review fees required as a direct result of submitting later in the process will be the sole responsibility of the applicant.
C. If no appeal is filed in writing within thirty (30) calendar days, the decision shall be considered final.

[This Page Intentionally Left Blank]

ARTICLE 11: RECORD DRAWINGS (AS-BUILTS)

11.1 INTRODUCTION

11.1.1 Purpose

The purpose of this Article is to provide record drawing submittal, review approval guidelines, and requirements for the record drawings of public infrastructure improvement projects within the City of Cottonwood.

11.1.2 Applicability

The plan submittal, review, and approval guidelines shall apply to all public infrastructure projects which include grading, drainage, storm drain, water infrastructure, water main, reclaimed water, wastewater main, fire line, transportation or traffic infrastructure, landscaping or survey data as defined in the City of Cottonwood's Engineering Design Standards Manual.

11.2 RECORD DRAWING PLANS

11.2.1 Record Drawing Plan Submittal

A. At the completion of the construction of the project and after receiving "APPROVAL" of the "Public Works – Final" Inspection, the Engineer of record shall make a record drawing submittal to Engineering, 1490 W Mingus Avenue. The Engineer of record shall submit the following items as part of the Record Drawing Submittal:
   1. One (1) mylar copy, 22" x 34", of the complete "Record Drawing" set of plans. The mylar shall have an original engineer's seal and signature and each page shall be noted as "As-Built". Partial sets of plans, shall not be accepted.
   2. Three (3) bond copies, 22" x 34", of the complete "Record Drawing" set of plans. Each copy shall have an original engineer's seal and signature and each page shall be noted as "As-Built". Partial sets of plans, shall not be accepted.
   3. PDF file of the complete "Record Drawing" set of plans.
   4. Arizona Department of Environmental Quality (ADEQ), "Approval of Construction" (AOC), if applicable.
   5. Digital File on the City of Cottonwood Coordinate System in conformance with EDSM, Article 9: Survey. All CAD files will be on a single disk media in AutoCAD (a release currently supported by Autodesk subscription plans). CAD files shall consist of base/design files on city coordinates to include, but not limited to the following: Topography, Right of Way, Sewer, Water, Reclaimed Water, Drainage, Grading, Typical Sections, etc. All deliverables to include but not limited to the following: General, Civil, Sewer, Water, Reclaimed Water, Details, etc. All CD/DVD's shall be labeled with the project name, company name, contact name, phone number, and the City of Cottonwood project number.

6. Test data in PDF and hardcopy format (e.g. water line disinfection/chlorination, pressure and bacteria test results; low pressure air, mandrel and vacuum manhole testing results; main & lateral closed circuit video (CCTV) inspection results). Refer to EDSM, Article 4: Water, Article 5: Reclaimed Water and Article 6: Wastewater.

Failure to submit the items listed above in conformance with the EDSM's may result in the delay of the setting of a water meter on the site as well as delay of an "Approval to Operate and Release" from the City of Cottonwood City Engineer.

B. The "Record Drawing" submittal shall have a company transmittal sheet listing the name and number of items submitted. The transmittal sheet shall also contain the company name, contact name and phone number.

C. Record Drawing plans shall include the following information, if it is applicable to the project:

1. Grading & Drainage Plans
    a. Finished pad grades. An average pad grade may be used if the pad is not flat. Pad elevations shall not exceed plus 0.5 feet tolerance (plus 0.2 feet if located adjacent to an existing development). Pad elevations shall not exceed minus 0.2 feet tolerance (0.1 feet if located in a floodplain of adjacent to a wash or channel)
    b. Flow line elevations of channels
    c. Hinge point elevations on all slopes and grade breaks
    d. Percentage of all slopes, flow lines and channels
    e. Catch basin grates elevation at top of grate
    f. Inverts of storm drain lines and headwalls
    g. As-built elevations shall be provided at all drainage control points (i.e. detention overflow point, tops and bottom of detention basins, drain rims, valley gutters, curbs, curb openings, flow line elevations in swales, etc.). As-built enough spot elevations to verify the design intentions are met (i.e. grade breaks, high/low points, scuppers, extreme outfall, etc.). Show the direction of drainage flow to illustrate that design intent has been met
    h. Provide calculations to verify the actual as-build volume of all detention facilities included on the as-builts, as well as a table which compares the as-built volumes with the approved, required volumes indicated on the design drawings or in the approved Drainage Report
    i. Detention calculations shall be revised to as-built condition by the engineer of record
    j. Flow line elevations and/or pipe inverts, grate elevations for catch basins, underground detention storage tanks, and all other drainage structures
    k. Top of flood walls, retaining walls, and cutoff walls
    l. Stations, offsets, and invert elevations for spillways and box culverts
    m. When storm drain lines and appurtenances are included in the G&D drawings, please refer to the Storm Drain Plan record drawing requirement for additional required items

2. Water/Reclaimed Water/ Fire Line Plans
    a. Location of all valves
    b. Main line horizontal angle points
    c. Pipe sizes, lengths and materials
    d. Blow-offs and meter boxes
    e. Horizontal and vertical separation from existing and new utilities and drainage culverts/storm drain
    f. Street centerline station and offset dimension to:
        i. All fire hydrants and fittings (e.g. valves)
        ii. Main at all changes in alignment
        iii. All horizontal control points (e.g. centerline intersects, PC, PT)
    g. Centerline station and offset to each service tap, size of tap and meter
    h. Note centerline station, offset and elevations to all changes in vertical alignment (e.g. dips, bends, etc. required to avoid conflicts with other utilities)
    i. The drawings must clearly indicate the specific points of reference. No dimensioning from points of curvature or tangency is acceptable for record drawing purposes. In all cases where the pipeline is constructed within, or parallel in close proximity with the right of way, all stationing and dimensioning must be from the nearest appropriate monument line and monument line intersection
    j. When water services are not installed perpendicular to the water main, both the location of the tap at the main and the distance of the meter set from the nearest side property line of the lot must be shown
    k. On phased projects, the phase lines must be clearly shown on the key map and on the plan and profile sheets, and their locations clearly identifiable. Actual pipe end locations relative to phasing lines must be shown by dimensioning of stationing
    l. A complete list of all materials installed and abandoned must be shown. The specific size and material type of each pipeline installed must be shown at every construction reference to that pipe. Any changes to the record drawing must be reflected on the materials list
3. Sewer Plans
    a. Manhole rim and inverts
    b. Pipe sizes and lengths
    c. Recalculated pipe slopes
    d. Location of cleanouts and individual service wyes
    e. Separation from existing/newly installed water mains, reclaimed water mains and culverts
    f. Street centerline station and offset dimension from street centerline to main at manholes
    g. Sewer line stationing at centerline of each service tap at 90 degrees to main; if not installed at 90 degrees to main, station and offset to end of each service tap

h. New manholes built on existing lines require showing its station from the nearest existing downstream manhole and its distance to the nearest existing upstream manhole
i. Where construction begins with removal of an existing pipe plug of cleanout, 0+00 stationing always begins at the nearest existing downstream manhole. Pipe length measurement and stationing is always from the centerline of the downstream manhole to the centerline of the upstream manhole or cleanout. Do not give partial pipe lengths in plan of profile at match lines. Always indicate the distance between manholes or to cleanouts or pipe ends
j. All as-built adjustment to manhole, cleanout and pipe information shall be shown on both plan and profile, and repeated on every sheet that refers to the same information
k. A complete list of all materials installed and abandoned must be shown. The specific size and material type of each pipeline installed must be shown at every construction reference to that pipe. Any changes to the record drawing must be reflected on the materials list
l. On phased projects, the phase lines must be clearly shown on the key map and on the plan and profile sheets, and their locations clearly identifiable. Actual pipe end locations relative to phasing lines must be shown by dimensioning of stationing

4. Paving Plans
    a. Top of curb, flow line, and pavement centerline elevations at all grade breaks, Points of Tangency (PT), Points of Curvature (PC), Beginning Curb Return (BCR), and Ending Curb Return (ECR), valley gutters, spandrels at intersections, plus any other location necessary to adequately show drainage
    b. Percentage of slope
    c. Valley gutter inverts
    d. Edge of pavement on rural road sections
    e. Locations of traffic signage, signals, poles and cabinets
    f. Station for all grade breaks
    g. Back of curb offset dimension at all changes in alignment
    h. Survey monuments: as-built installation and provide City of Cottonwood Northing/Easting to the hundredth of one foot. For street monuments, provide top of monument as-built elevation in addition
    i. Distance from monument line to back/face of curb, edge of pavement, and sidewalk; show on plan view or typical detail for street section
    j. Beginning and ending stations and elevations for all traffic calming devices
    k. Stations, offsets, and invert elevations for spillways and box culverts
    l. Flow line elevations and/or pipe inverts, grate elevations for catch basins, underground detention storage tanks, and all other drainage structures
5. Traffic Signal Plans

a. Street centerline station and offset dimension to all fixture poles, cabinets, boxes, or other signal related furniture
b. Horizontal location of conduit along with elevations to top of conduit

6. Signing & Striping Plans
    a. Street centerline station and offset dimension to all signage, painted arrows, wording and symbols
    b. Face of curb dimensions to all striping
7. Storm Drain Plans
    a. Street centerline station and offset dimension to the main at all changes in alignment and/or changes in grade
    b. Street centerline station and offset dimension to all structures and changes in alignment
    c. Top and invert elevations for all structures
    d. Drainage pipe inverts
    e. Finish elevation for catch basins
    f. Invert elevations of box culverts
    g. Length of headwall wing
    h. Length of catch basin wings
8. Landscaping
9. Street Light Plans
    a. Record drawings for street lights are required to have an Arizona Public Service (APS) ID number on each street light noted on the plan
    b. Street centerline stationing and offsets for street lights

D. Record Drawings shall be signed and sealed by a Registered Professional Engineer with the "AS-BUILT CERTIFICATION" approval block as shown below:

I HEREBY CERTIFY, TO THE BEST OF MY KNOWLEDGE, INFORMATION AND BELIEF, THAT THIS PROJECT HAS BEEN COMPLETED IN SUBSTANTIAL CONFORMANCE WITH THE APPROVED PLANS, SPECIFICATIONS AND REFERENCED STANDARDS, EXCEPT AS SHOWN HEREON; THAT THESE AS-BUILT PLANS REFLECT THE POSITION OF CONSTRUCTED IMPROVEMENTS BASED ON FIELD MEASUREMENTS; AND THAT THE MATERIALS USED IN CONSTRUCTION ARE AS SHOWN BASED ON FIELD OBSERVATION AND TEST RESULTES.

THIS CERTIFICATION DOESN NOT WARRANT MATERIALS, WORKMANSHIP, METHODS OF CONSTRUCTION, OR OTHER ITEMS AFFECTING THE WARRANTY OF THIS PROJECT, TO THE CITY OF COTTONWOOD. USERS OF THIS INFORMATION ARE ADVISED TO OBTAIN INDEPENDENT VERIFICATION OF ACTUAL CONDITIONS.

_____

REGISTERED PROFESSIONAL ENGINEER (CIVIL) DATE

E. Benchmark locations and elevations must be shown on the coversheet. Only the City vertical datum is acceptable.

F. Improvement that have been constructed in accordance with the design plans shall have a bold (AB) lettered next to them. Minor as-built changes to the approved plans must be shown clearly by boldly striking through the item changed and placing the as-build information next to or as near as possible to it, and the letters (AB). All as-built changes must be larger and bolder than the original and free from background obscuring.

G. The following items must be shown on the cover sheet by the City of Cottonwood department responsible for construction inspection:

    a. Name of Contactor
    b. Permit number {identify phase if applicable}
    c. Date of approval by City of Cottonwood Inspector
    d. Name of City of Cottonwood Inspector who witnessed the construction

H. Record Drawing plans shall be reviewed and approved, by the Fire Department, Utilities Division, Public Works Inspection, and City Engineer.

APPENDICIES

APPENDIX A: LIST OF TABLES

TABLE 2-1: FILL COMPACTION 2-3
TABLE 3-1: RAINFALL DATA FOR CITY OF COTTONWOOD 3-9
TABLE 3-2: MANHOLE SPACING CRITERIA 3-19
TABLE 4-1: UNIT DESIGN FLOWS FOR WATER 4-11
TABLE 4-2: C-FACTORS 4-18
TABLE 5-1: C-FACTORS 5-12
TABLE 6-1: DESIGN CRITERIA 6-11
TABLE 6-2: UNIT DAILY DESIGN FLOWS FOR SEWER (NON-RESIDENTIAL LAND USES) 6-12
TABLE 6-3: NON-RESIDENTIAL DRY WEATHER PEAKING FACTORS FOR WASTEWATER COLLECTION SYSTEMS 6-14
TABLE 6-4: WASTEWATER FLOW PEAKING FACTOR 6-20
TABLE 6-5: MINIMUM DESIGN SLOPES FOR CIRCULAR PIPES 6-21
TABLE 6-6: MANHOLE SPACING 6-22
TABLE 6-7: BURY REQUIREMENTS FOR WASHES 6-25
TABLE 7-1: STREET RIGHT OF WAY REQUIREMENTS 7-3
TABLE 7-2: MINIMUM HORIZONTAL CURVE RADIUS 7-5
TABLE 7-3: MINIMUM STOPPING SIGHT DISTANCE 7-6
TABLE 7-4: TANGENT SECTIONS (Curves in the Same Direction) 7-7
TABLE 7-5: MINIMUM TANGENT SECTIONS (Reverse Curves) 7-7
TABLE 7-6: TANGENT SECTIONS AT INTERSECTIONS 7-8
TABLE 7-7: VERTIAL CURVE REQUIREMENTS 7-8
TABLE 7-8: LONGITUDINAL STREET GRADE 7-9
TABLE 7-9: STREET INTERSECTION & CURB CUT SEPARATION 7-10
TABLE 7-10: RIGHT TURN LANE WARRANTS 7-12
TABLE 7-11: LEFT TURN LANE WARRANTS 7-13
TABLE 7-12: DRIVEWAY SPACING 7-14
TABLE 7-13: NUMBER OF DRIVEWAYS 7-15
TABLE 7-14: CURB RETURN RADII 7-18
TABLE 7-15: PARKING RESTRICTION SIGN SPACING 7-24
TABLE 7-16: PARKING RESTRICTION GUIDELINES – STREET WIDTH 7-24
TABLE 7-17: PARKING RESTRICTION SIGN TYPE & SIZES 7-25
TABLE 7-18: STREET LIGHT LUMINAIRE WATTAGE 7-28
TABLE 9-1: SURVEY DATUM REQUIREMENTS 9-3

[This Page Intentionally Left Blank]

APPENDIX B: CITY OF COTTONWOOD STANDARD DETAILS

[This Page Intentionally Left Blank]

1100 SERIES: GENERAL INFORMATION

DETAIL	TITLE
1100	INDEX
1101–1	GENERAL ENGINEERING NOTES
1101–2	GENERAL ENGINEERING NOTES
1102	GRADING & DRAINAGE NOTES
1103	PAVING NOTES
1104–1	POTABLE WATER NOTES
1104–2	POTABLE WATER NOTES
1105	RECLAIMED WATER NOTES
1106	SANITARY SEWER NOTES
1107	STORMWATER POLLUTION PREVENTION NOTES
1108	STORMWATER POLLUTION PREVENTION INSPECTION NOTES
1109	EROSION & SEDIMENT CONTROL NOTES
1131	SIGN POST INSTALLATION
1138	MAILBOX WITH PARKWAY
1145	HANDRAIL

1200 SERIES: STREET INFORMATION

DETAIL	TITLE
1212	UTILITY POTHOLE REPAIR
1220–1	CURB & GUTTER TYPES A, B, C & D
1220–2	3' ROLL CURB & ROLL CURB TRANSITION
1221	CURB & GUTTER TRANSITION TYPE 'A' TO TYPE 'C'
1230	SIDEWALKS
1235	CURB RAMPS
1250–1	DRIVEWAY ENTRANCE WITH DETACHED SIDEWALKS
1250–2	DRIVEWAY ENTRANCE WITH SIDEWALK ATTACHED TO CURB
1255	RESIDENTIAL DRIVEWAY SECTION
1270	8" FRAME & COVER
1271	DEBRIS CAP INSTALLATION

1300 SERIES: POTABLE WATER INFORMATION

DETAIL	TITLE
1303–1	JOINT RESTRAINT FOR DUCTILE IRON & POLYETHYLENE WRAPPED IRON DUCTILE WATER PIPES
1303–2	JOINT RESTRAINT FOR DUCTILE IRON & POLYETHYLENE WRAPPED DUCTILE IRON WATER PIPES
1316	1" – 2" WATER SERVICE CONNECTIONS
1317	1" AIR VACUUM RELEASE VALVE ASSEMBLY
1319–1	TRACER WIRE FOR ALL PRESSURE PIPE SYSTEMS
1319–2	TRACER WIRE TEST STATION
1323	PRESSURE REDUCING VALVES
1340	TAPPING SLEEVES & VALVES
1360	FIRE HYDRANT INSTALLATION
1362	LOCATIONS FOR NEW FIRE HYDRANTS
1363	FIRE HYDRANT VERTICAL DEFLECTION
1364	DOUBLE CHECK VALVE BACKFLOW PREVENTION ASSEMBLY FOR ASSEMBLIES 3 INCHES THRU 10 INCHES
1370	VERTICAL REALIGNMENT OF WATER MAINS
1391	VALVE BOX

1400 SERIES: SANITARY SEWER INFORMATION

DETAIL	TITLE
1402	DRY UTILITY SEPARATION
1416	SANITARY FORCE MAIN AIR & VACUUM RELEASE VALVE
1420–1	PRECAST CONCRETE SEWER MANHOLE
1420–2	MANHOLE IN DRAINAGEWAYS
1420–3	CONCRETE MANHOLE BASE
1422	MANHOLE FRAME ADJUSTMENT
1423–1	24" CAST IRON MANHOLE FRAME & COVER
1423–2	30" CAST IRON MANHOLE FRAME & COVER
1426	INSIDE DROP MANHOLE
1440–1	SEWER SERVICE LATERAL GRATER THAN 2' DEEP
1440–2	SEWER SERVICE LATERAL 2' DEEP OR LESS
1440–3	BACKWATER VALVE
1440–4	WATER & SEWER SERVICE CURB CROSSING STAMP DETAIL
1441	SEWER MAIN CLEANOUT

1500 SERIES: RECLAIMED WATER INFORMATION

DETAIL	TITLE
1501–1	LARGE RECLAIMED WATER IDENTIFICATION TAG & DECAL
1501–2	SMALL RECLAIMED WATER IDENTIFICATION TAG
1502	RECLAIMED WATER VALVE BOX & COVER
1503	RECLAIMED WATER SERVICE CONNECTION

1600 SERIES: TRAFFIC ENGINEERING

DETAIL	TITLE
1601	LOCAL STREET CROSS SECTION
1602	2–LANE COLLECTOR CROSS SECTION
1603	3–4 LANE COLLECTOR CROSS SECTION
1604	4–5 LANE ARTERIAL CROSS SECTION
1605	INTERSECTION SIGHT VISIBILITY TRIANGLES
1610	FIRE LANE ACCESS
1611	GRAVEL ACCESS ROAD
1612	MULTI–USE TRAILS
1620	CROSSWALK STRIPING AT INTERSECTIONS
1621	CROSSWALK MARKINGS
1622	STOP MARKINGS

CITY OF COTTONWOOD STANDARD DETAIL	INDEX	CITY ENGINEER	REVISED	DETAIL NO.
			04/2020	1100

1. THE CITY OF COTTONWOOD DOES NOT WARRANT ANY QUANTITIES SHOWN ON THESE PLANS. IT SHALL BE THE CONTRACTOR'S RESPONSIBILITY TO VERIFY ALL QUANTITIES. THE CITY OF COTTONWOOD SHALL NOT BE HELD RESPONSIBLE FOR ERRORS IN ESTIMATES OF QUANTITIES, MATERIALS, SCHEDULE, INSTALLATION REQUIREMENTS, OR SIZE.
2. THE CITY OF COTTONWOOD ENGINEERING DEPARTMENT, INSPECTION STAFF, SHALL BE NOTIFIED 48 HOURS PRIOR TO ANY CONSTRUCTION WORK BY TELEPHONE AT 928.634.8033. ANY WORK CONCEALED WITHOUT INSPECTION SHALL BE SUBJECT TO REMOVAL AND REPLACEMENT AT THE CONTRACTOR'S EXPENSE.
3. AN APPROVED SET OF PLANS SHALL BE AVAILABLE ON THE JOB SITE AT ALL TIMES. THE CONTRACTOR'S REPRESENTATIVE (CAPABLE OF COMMUNICATING WITH THE CITY'S REPRESENTATIVES) SHALL BE ON THE JOB AT ALL TIMES THE WORK IS BEING PURSUED.
4. THE PROCEDURES AND METHODS USED TO SAMPLE, TEST MATERIALS, AND REPORT TEST RESULTS WILL BE DETERMINED BY THE CITY OF COTTONWOOD ENGINEERING DEPARTMENT. FOR ALL PHASES OF CONSTRUCTION, THE TYPE, SCHEDULING, FREQUENCY AND LOCATION OF ALL MATERIALS TESTING AND SAMPLING SHALL BE DETERMINED BY THE CITY ENGINEER. THE INSPECTOR SHALL SELECT TESTING LOCATIONS AND INCREASE OR DECREASE THE FREQUENCY OF THE TESTS. COSTS OF MATERIAL TESTING SHALL BE THE RESPONSIBILITY OF THE PROPERTY DEVELOPER. A THIRD PARTY TESTING LABORATORY SHALL BE USED FOR ALL MATERIAL TESTING. AS A GENERAL GUIDELINE TESTING FREQUENCY SHALL BE:
   CONCRETE – 1 SET OF 4 CYLINDERS PER 50 CUBIC YARDS @ 3,000 PSI
   SUBGRADE – 1 DENSITY TEST PER 500 LINEAL FEET @ 95% COMPACTION
   BASE COURSE – 1 DENSITY TEST PER 500 LINEAL FEET @ 100% COMPACTION
   ASPHALT – 1 DENSITY TEST PER 500 LINEAL FEET IN EACH LANE. I EXTRACTION PER DAY OF PAVING. 1 GRADATION CHECK PER PAVING DAY.
5. THE CONTRACTOR IS RESPONSIBLE FOR THE DEMOLITION, REMOVAL, AND LEGAL DISPOSAL OF ALL ITEMS SHOWN AS BEING REMOVED ON THESE PLANS.
6. IT IS THE CONTRACTOR'S SOLE RESPONSIBILITY TO VERIFY THE PRESENCE AND LOCATION OF ALL EXISTING OVERHEAD AND/OR UNDERGROUND UTILITIES AND IRRIGATION LINES THAT MAY INTERFERE WITH THIS CONSTRUCTION, WHETHER OR NOT SAID UTILITIES ARE SHOWN ON THE CONSTRUCTION PLANS FOR THIS PROJECT AND TO ADEQUATELY PROTECT, REPAIR AS REQUIRED, AND MAINTAIN ANY SUCH UTILITIES AND IRRIGATION LINES.
7. THE CONTRACTOR SHALL ONLY USE RECLAIMED WATER FOR COMPACTION AND DUST CONTROL. RECLAIMED WATER PURCHASED IS AVAILABLE BY CONTACTING THE CITY OF COTTONWOOD UTILITIES DEPARTMENT 928.634.0186.
8. ALL DRAINAGE PROTECTIVE DEVICES SUCH AS SWALES, INTERCEPTION DITCHES, PIPES, PROTECTIVE BERMS, CONCRETE CHANNELS OR OTHER MEASURES DESIGNED TO PROTECT IMPROVEMENTS, WHETHER EXISTING OR PROPOSED, FROM RUNOFF OR DAMAGE FROM STORMWATER, MUST BE CONSTRUCTED PRIOR TO THE CONSTRUCTION OF ANY IMPROVEMENTS.
9. TRAFFIC CONTROL SHALL CONFORM WITH THE CITY OF COTTONWOOD ROW PERMIT, MUTCD, AND THE CITY OF COTTONWOOD RIGHT OF WAY PERMIT GUIDELINES, AS APPLICABLE.
10. ALL CONTRACTOR'S RESPONSIBLE TO OBTAIN A NATIONAL POLLUTION DISCHARGE ELIMINATION SYSTEM (NPDES) PERMIT IN ACCORDANCE WITH FEDERAL AND STATE REGULATIONS, INCLUDING NOTICE OF INTENT (NOI), NOTICE OF TERMINATION, AND STORMWATER POLLUTION PREVENTION PLAN (SWPPP). A COPY OF THE NOI AND SWPPP SHALL BE AVAILABLE ON THE JOB SITE AT ALL TIMES. THIS APPLIES TO ALL SITES GREATER THAN 1.0 ACRE IN SIZE.
11. IT IS THE RESPONSIBILITY OF THE CONTRACTOR TO OBTAIN ANY AND ALL OTHER PERMITS AND MEET ANY REQUIREMENTS SET FORTH BY OTHER AGENCIES OR UTILITIES, WHICH HAVE JURISDICTION, AT THE CONTRACTOR'S EXPENSE, INCLUDING OSHA.
12. ALL CONTRACTORS ARE RESPONSIBLE TO CONSTRUCT STABILIZED CONSTRUCTION ENTRANCES, IF REQUIRED, IN ORDER TO REDUCE OR ELIMINATE THE TRACKING OF SEDIMENT ONTO PUBLIC RIGHTS OF WAYS OR STREETS. GRAVEL TRACK–OUT PADS SHALL MEET CURRENT MAG STANDARDS. THE CONTRACTOR SHALL IMMEDIATELY REMOVE ANY SEDIMENT TRACKED ONTO PUBLIC RIGHTS OF WAYS OR STREETS.
13. THE CONTRACTOR SHALL BE RESPONSIBLE FOR THE MAINTENANCE OF ALL WORK AREAS INCLUDING STREETS & PAVED AREAS, DRAINAGEWAYS AND DRAINAGE APPURTENANCES, WORK AREA UTILITIES WHETHER BURIED OR EXPOSED, EMBANKMENTS & CUT SLOPES, AND ALL UNFINISHED WORK AREAS. THE CONTRACTOR SHALL DO WHAT IS REQUIRED SO THAT ACCESS IS NOT DENIED TO ANY PROPERTY ALONG THE PROPOSED CONSTRUCTION FOR ANY DURATION THAT WOULD INTERFERE WITH NORMAL DAILY INGRESS AND EGRESS. ALL DRIVING AREAS SHALL BE GRADED TO FINISH SURFACE FOLLOWING THE REQUIRED TRENCH FILL SPECIFICATIONS IMMEDIATELY AFTER THE INSTALLATION IS COMPLETE IN ORDER THAT ACCESS IS NOT INTERRUPTED ALONG THE PROPOSED CONSTRUCTION. THE CONTRACTOR SHALL LEAVE ALL DRAINAGEWAYS AND APPURTENANCES IN OPERATING ORDER THROUGHOUT THE CONSTRUCTION DURATION. THE CONTRACTOR SHALL ASSURE THAT ALL CUT AND FILL SLOPES ARE REPLACED AT THE PRIOR CONDITIONS OR AS SHOWN ON THE APPROVED PLANS. THE CONTRACTOR SHALL SEE THAT ALL UNFINISHED WORK AREAS SHALL BE MAINTAINED TO ASSURE THAT OPEN TRENCHES ARE SECURE AND NOT LEFT UNATTENDED, THAT DRAINAGE IS NOT ALLOWED TO ENTER OPEN TRENCHES AND DAMAGE EXISTING AND NEW UTILITIES, AND THAT PUBLIC SAFETY IS ASSURED ALONG THE ENTIRE CONSTRUCTION ROUTE AT ALL TIMES. CONTRACTOR SHALL MEET OSHA STANDARDS FOR TRENCH SAFETY.
14. PRIOR TO THE START OF ANY WORK, THE CONTRACTOR SHALL SCHEDULE AND ATTEND A PRE–CONSTRUCTION AND UTILITY COORDINATION MEETING. ALL WORK, PLANS, SPECIFICATIONS, INSPECTION REQUIREMENTS, AND SCHEDULING SHALL BE DISCUSSED AT THIS MEETING.
15. THE CONTRACTOR SHALL BE RESPONSIBLE FOR FOLLOWING ALL ARIZONA BLUE STAKE LAWS PRIOR TO AND DURING CONSTRUCTION BY CONTACTING THE BLUE STAKE AUTHORITY AT 1.800.STAKE.IT OR 811. THE CONTRACTOR IS RESPONSIBLE FOR MAINTAINING THE INTEGRITY OF THE BLUE STAKE AS IS REQUIRED THROUGHOUT THE PROJECT CONSTRUCTION DURATION. THE CONTRACTOR IS RESPONSIBLE FOR COMPLYING WITH ALL APPLICABLE ARIZONA BLUE STAKE AUTHORITY REGULATIONS. CONTRACTOR SHALL PROVIDE THE CITY OF COTTONWOOD ENGINEERING STAFF WITH EVIDENCE OF ANY AREA BEING DISTURBED HAVING BEEN BLUE STAKED PRIOR TO THE COMMENCEMENT OF CONSTRUCTION.
16. THE CONTRACTOR IS RESPONSIBLE TO PROVIDE SUFFICIENT MANPOWER, PARTS, AND EQUIPMENT ON THE JOB SITE AT ALL TIMES DURING THE DURATION OF THE CONSTRUCTION PROJECT TO BOTH COMPLY WITH THE PROJECT SPECIFICATIONS AND ALSO ACCOMPLISH THE WORK IN A TIMELY MANNER.

CITY OF COTTONWOOD STANDARD DETAIL	GENERAL ENGINEERING NOTES	CITY ENGINEER	REVISED	DETAIL NO.
			08/18	1101–1

17. THE CONTRACTOR IS RESPONSIBLE FOR COMPLYING WITH ALL APPLICABLE SPECIFICATIONS AS REQUIRED IN THE CURRENT UNIFORM STANDARD SPECIFICATIONS AND DETAILS OF PUBLIC WORKS CONSTRUCTION BY MARICOPA ASSOCIATION OF GOVERNMENTS COMMONLY REFERRED TO AS MAG STANDARDS, CITY OF COTTONWOOD ENGINEERING DESIGN STANDARDS MANUL, REGULATIONS OR SPECIFICATIONS, ANSI/AWWA SPECIFICATIONS, AND/OR OTHER STATE AND FEDERAL SPECIFICATIONS, AS APPLICABLE.
18. THE CONTRACTOR SHALL BE RESPONSIBLE TO DETERMINE TRENCH BRACING, SHEATHING, SHORING OR SIDE SLOPES AS REQUIRED FOR THE SAFETY AND CONFORMANCE TO ALL APPLICABLE TO ALL APPLICABLE OSHA LAWS AND CONSTRUCTION STANDARDS FOR THE EXCAVATION AND TRENCHING OF THIS PROJECT. THE CONTRACTOR SHALL ASSURE THAT SUITABLE AND SAFE CONDITIONS, INCLUDING PROPER TRAFFIC AND SAFETY CONTROL, ARE MET THROUGHOUT THE DURATION OR WORK WILL BE CEASED UNTIL SUCH TIME THAT THE UNSAFE CONDITION IS RECTIFIED. THE CITY OF COTTONWOOD SHALL NOT BE HELD IN ANY WAY RESPONSIBLE FOR AMY LOST TIME BY THE CONTRACTOR DUE TO UNSAFE CONDITIONS OR THE ENFORCEMENT OF THIS SPECIFICATION.
19. THE CONTRACTOR SHALL SUBMIT A TRAFFIC CONTROL PLAN TO THE CITY OF COTTONWOOD ENGINEERING DEPARTMENT, CITY ENGINEER, FOR APPROVAL PRIOR TO THE COMMENCEMENT OF CONSTRUCTION.
20. THE CITY OF COTTONWOOD MAY SUSPEND THE WORK BY WRITTEN NOTICE WHEN, IN THEIR JUDGMENT, PROGRESS IS UNSATISFACTORY OR UNAUTHORIZED, THE PRODUCT IS UNSATISFACTORY, WEATHER CONDITIONS ARE UNSUITABLE OR THERE IS DANGER TO THE PUBLIC.
21. THE CITY OF COTTONWOOD MAY REQUIRE THE SUBMITTAL OF A "CERTIFICATE OF COMPLIANCE" AND/OR "MANUFACTURER'S GUIDELINES" FOR ANY MATERIALS USED IN THE WORK. MANUFACTURER'S GUIDELINES SHALL CONSIST OF WRITTEN INSTRUCTIONS FOR SHIPPING, HANDLING, UNLOADING, CUTTING, JOINING, INSTALLATION, STORAGE, AND/OR ANY OTHER FACETS OF WORKING.
22. SHOP DRAWINGS SHALL BE PROVIDED BY THE CONTRACTOR PER MAG SPECIFICATION SECTION 105.2.
23. THE CITY OF COTTONWOOD MAY ORDER ANY MATERIALS USED IN THE WORK TO BE TESTED ACCORDING TO AASHTO AND ASTM STANDARDS. THE CONTRACTOR SHALL, AT THEIR EXPENSE, SUPPLY CERTIFICATES OR RESULTS OF TESTING.
24. THE CONTRACTOR MAY SUBMIT CAREFULLY DOCUMENTED AND CONSIDERED WRITTEN PROPOSAL FOR ALTERNATE MATERIALS AND CONSTRUCTION METHODS. THOSE PROPOSALS THAT ARE FOUND TO BE IN CONFORMITY WITH GOOD ENGINEERING DESIGN AND CAN EASILY BE OBTAINED BY CITY FORCES MAY BE GIVEN WRITTEN APPROVAL BY THE CITY ENGINEER FOR INCORPORATION IN THE CONSTRUCTION PLANS IF THEY ARE FOUND TO BE IN THE PUBLIC INTEREST.
25. ALL IMPROVEMENTS SHALL BE CONSTRUCTED BY CONTRACTORS LICENSED BY THE ARIZONA STATE REGISTRAR OF CONTRACTORS, WITH A CLASS OF LICENSE(S) FOR THE SPECIFIC WORK BEING PERFORMED.
26. THE CITY OF COTTONWOOD, INSPECTION STAFF, SHALL BE NOTIFIED 24 HOURS PRIOR TO BEGINNING DIFFERENT PHASES OF CONSTRUCTION SO THAT OBSERVATIONS MAY BE SCHEDULED.
27. APPROVAL OF A PORTION OF THE WORK IN PROGRESS DOES NOT GUARANTEE ITS FINAL ACCEPTANCE. TESTING AND EVALUATION MAY CONTINUE UNTIL WRITTEN FINAL ACCEPTANCE OF A COMPLETE WORKABLE UNIT. ACCEPTANCE OF COMPLETED IMPROVEMENT WILL NOT BE GIVEN UNTIL DEFECTIVE OR UNAUTHORIZED WORK IS REMOVED, AND FINAL CLEAN-UP IS COMPLETE.
28. THE CITY OF COTTONWOOD RESERVES THE RIGHT TO REQUEST MODIFICATIONS TO THESE PLANS DURING CONSTRUCTION IF FIELD CONDITIONS WARRANT AND THE DESIGN ENGINEER CONCURS.
29. ANY DEFECTS WHICH APPEAR IN THE WORK WITHIN THE WARRANTY PERIOD GIVEN IN THE PROJECT CONTRACT FROM THE DATE OF ACCEPTANCE AND WHICH ARE DUE TO IMPROPER WORKMANSHIP OR INFERIOR MATERIALS SUPPLIED SHALL BE CORRECTED BY OR AT THE EXPENSE OF THE CONTRACTOR.
30. THE CONTRACTOR SHALL BE RESPONSIBLE FOR MAINTENANCE OF THE STREETS AND OF PARTIALLY COMPLETED PORTIONS OF THE WORK UNTIL FINAL ACCEPTANCE OF THE WORK. CONTRACTOR SHALL BE RESPONSIBLE FOR MAINTAINING THE QUALITY OF EXISTING STREETS LEADING TO THE PROJECT SITE. EXISTING STREETS FOUND TO BE DAMAGED BY CONSTRUCTION TRAFFIC SHALL BE REPAIRED TO THE SATISFACTION OF THE CITY OF COTTONWOOD BY THE CONTRACTOR AT NO ADDITIONAL EXPENSE TO THE OWNER.
31. STREETS CLOSED BECAUSE OF CONSTRUCTION SHALL BE PROVIDED WITH BARRICADES ABD/OR HAZARD SIGNS AS REQUIRED AND APPROVED BY THE CITY OF COTTONWOOD ENGINEERING DEPARTMENT, INSPECTION STAFF. THE CITY OF COTTONWOOD DEPARTMENT OF PUBLIC SAFETY SHALL BE NOTIFIED 48 HOURS PRIOR TO ANY STREET CLOSURE.
32. PRIOR TO APPROVAL OF AN IMPROVEMENT PROJECT, AN "AS-BUILT" PLAN MUST BE SUBMITTED TO THE CITY ENGINEER. THE AS-BUILT PLAN SHALL INDICATE THE ACTUAL LOCATION OF WATER MAINS, SEWER MAINS, UNDERGROUND DRAINAGE STRUCTURES, ALL SEWER AND WATER SERVICES, ALL FITTINGS, VALVES AND MANHOLES RELATIVE TO RIGHT OF WAY BOUNDARIES, LOT LINE, OR OTHER POINTS OF SURVEY.
33. THE ACCURACY OF ALL CONSTRUCTION WORK SHALL BE MAINTAINED AND VERIFIED BY THE CONTRACTOR'S SURVEYOR AT THE CONTRACTOR'S EXPENSE. STAKES WILL BE SET ESTABLISHING LINES AND GRADES (FINISH OR FLOWLINE) FOR ALL CONSTRUCTION INCLUDING ROADS, CURB AND GUTTER, SIDEWALKS, UTILITIES, STRUCTURES, AND OTHER WORK AS CONSIDERED NECESSARY. ALL SURVEY CONTROL SHALL BE SET BY THE CONTRACTOR'S SURVEYOR FROM MONUMENTS PER THESE APPROVED PLANS.
34. A COPY OF THE ADEQ PERMITS ISSUED PRIOR TO NEW CONSTRUCTION, EXTENSION TO, OR MODIFICATION OF A WATER DISTRIBUTION SYSTEM, SEWER COLLECTION OR INDIVIDUAL SEWAGE TREATMENT SYSTEM SHALL BE ONSITE AT ALL TIMES.
35. RELOCATION OF SIGNS, TREES, SHRUBS, MAILBOXES AND OTHER INCIDENTALS REQUIRING RELOCATION SHALL BE MOVED ONLY FAR ENOUGH TO ALLOW CONSTRUCTION OF THE PROJECT AND CAUSE THE LEAST DISRUPTION TO PRIVATE PROPERTY, AND LANDSCAPE. FINAL POSITIONS SHALL BE APPROVED BY THE CITY OF COTTONWOOD PRIOR TO RELOCATION. ALL RELOCATED ITEMS SHALL CONTINUE TO WORK IN THEIR INTENDED CAPACITY AFTER THE RELOCATION HAS BEEN ACCOMPLISHED. NO SIGNS SHALL BE RELOCATED TO POSITIONS OUTSIDE DESIGNATED RIGHTS OF WAY. SAFETY SHALL BE A PRIMARY CONSIDERATION IN THE PLACEMENT OF SHRUBBERY AND SIGNS WHICH COULD POSSIBLY DISRUPT THE SIGHT DISTANCE OF MOTORISTS.
36. NO JOB WILL BE CONSIDERED COMPLETE UNTIL FINAL GRADING IS COMPLETE AND ALL CURBS, PAVEMENT, AND SIDEWALKS HAVE BEE SWEPT CLEAN OF ALL DIRT AND DEBRIS, ALL SURVEY MONUMENTS ARE INSTALLED, AND ALL VALVES, MANHOLES AND BOXES HAVE BEEN ADJUSTED TO GRADE ACCORDING TO THESE APPROVED PLANS.

CITY OF COTTONWOOD STANDARD DETAIL	GENERAL ENGINEERING NOTES	CITY ENGINEER	REVISED	DETAIL NO.
			08/18	1101-2

1. EXCAVATING CONTRACTOR MUST GIVE LOCATION FOR WASTING EXCESS EXCAVATION IF LOCATED WITHIN THE CITY OF COTTONWOOD AND A LETTER FROM THE OWNER GIVING PERMISSION FOR DUMPING PRIOR TO STARTING ON–SITE CONSTRUCTION. IF EXCESS EXCAVATION EXCEEDS 50 CUBIC YARDS AND IS DISPOSED OF ON PRIVATE PROPERTY, THE DISPOSAL SITE WILL ALSO REQUIRE A GRADING AND DRAINAGE PERMIT.
2. GRADING AND DRAINAGE PLAN APPROVAL INCLUDES THE CONSTRUCTION OF ALL SURFACE IMPROVEMENTS SHOWN ON THE APPROVED PLANS.
3. ALL RAMPS MUST MEET ADA ACCESSIBILITY GUIDELINES (ADAAG) STANDARDS AND MAG UNIFORM STANDARD SPECIFICATIONS AND COTTONWOOD ENGINEERING DESIGN STANDARDS MANUAL; 2% MAX CROSS SLOPES AND 12:1 MAX LONGITUDINAL SLOPES UNLESS DEVIATION IS SHOWN ON THE APPROVED PLANS.
4. COMPACTION SHALL COMPLY WITH MAG SECTION 601 OR AS SPECIFIED IN THE APPROVED PLANS.
5. TREES AND SHRUBBERY THAT CONFLICT WITH PROPOSED IMPROVEMENTS SHALL NOT BE REMOVED WITHOUT WRITTEN APPROVAL OF THE CITY ENGINEER. THE CONTRACTOR SHALL BE RESPONSIBLE FOR OBTAINING AUTHORIZATION TO REMOVE AND/OR RELOCATE SAID TREES OR SHRUBBERY BY CALLING THE CITY OF COTTONWOOD ENGINEERING DEPARTMENT, INSPECTION STAFF AT 928.634.8033.
6. SUBGRADE PREPARATION SHALL CONFORM WITH THE GEOTECHNICAL REPORT, IF APPLICABLE, FOR THIS PROJECT UNLESS OTHERWISE DIRECTED IN THE APPROVED PLANS.
7. THE CONTRACTOR SHALL PRESERVE AND MAINTAIN CONSTRUCTION STAKING AND REFERENCE AND CONTROL POINTS UNTIL SUCH A TIME THAT THEY ARE NO LONGER REQUIRED. IN THE EVENT THAT THESE ITEMS ARE MOVED OR DESTROYED, IT SHALL BE THE CONTRACTOR'S RESPONSIBILITY TO HOVE THOSE ITEMS RE–ESTABLISHED FOR LOCATION AND GRADE.
8. ALL HEADWALLS, RETAINING WALLS, OR ANY OTHER INSTANCES WHERE THERE IS A BREAK IN GRADE OF 30" OR MORE SHALL REQUIRE THE INSTALLATION OF A SAFETY RAIL PER COTTONWOOD STANDARD DETAIL 1145.
9. THE CONTRACTOR IS RESPONSIBLE FOR LOCATING AND CONFIRMING THE DEPTH OF ALL EXISTING UTILITY LINES WITHIN PROPOSED RETENTION AND DETENTION FACILITY AREAS. IF THE DRAINAGE FACILITIES CANNOT BE CONSTRUCTED PER PLAN AS A RESULT OF CONFLICT WITH UNDERGROUND UTILITIES, THE CONTRACTOR SHOULD CONTACT THE CITY ENGINEER AND REQUEST MODIFICATION TO THE DRAINAGE FACILITY DESIGN BY THE DESIGN ENGINEER.
10. ALL LANDSCAPE AND IRRIGATION INSTALLED WITHIN THE CITY RIGHT OF WAY OR OTHER CITY MAINTAINED AREAS SHALL BE INSTALLED PER THE APPROVED PLANS. ALL LANDSCAPING APPROVED AS A PART OF THE SITE PLAN PROCESS SHALL BE INSTALLED PER THE APPROVED PLANS. ANY DEVIATIONS TO THE APPROVED PLANS REQUIRE APPROVAL FROM THE CITY ENGINEER.

CITY OF COTTONWOOD STANDARD DETAIL	GRADING & DRAINAGE NOTES	CITY ENGINEER	REVISED	DETAIL NO.
			08/18	1102

1. COMPACTION SHALL BE PER MAG SECTION 601.
2. ALL CONSTRUCTION SHALL CONFORM TO THE LATEST APPLICABLE MARICOPA ASSOCIATION OF GOVERNMENTS (MAG) UNIFORM STANDARD SPECIFICATIONS AND COTTONWOOD ENGINEERING DESIGN STANDARDS MANUAL OR SPECIFICALLY AS SHOWN IN THESE PLANS.
3. THE CITY OF COTTONWOOD ENGINEERING DEPARTMENT, 928.634.8033, SHALL BE NOTIFIED 48 HOURS PRIOR TO ANY CONSTRUCTION WORK COMMENCING.
4. EXISTING OR NEWLY DAMAGED AND/OR DISPLACED CONCRETE CURB, GUTTER, SIDEWALK, OR DRIVEWAY SLABS SHALL BE REPAIRED OR REPLACED, AS NOTED BY CITY INSPECTORS, BEFORE FINAL ACCEPTANCE OF THE WORK.
5. OBSTRUCTIONS TO PROPOSED IMPROVEMENTS SHALL BE REMOVED OR RELOCATED BEFORE BEGINNING CONSTRUCTION OF THE PROPOSED IMPROVEMENTS.
6. PAVING SHALL NOT START UNTIL ALL APPROPRIATE TESTING HAS BEEN COMPLETED AND ACCEPTED BY THE CITY OF COTTONWOOD ENGINEERING DEPARTMENT.
7. THE BASE MATERIAL SHALL BE SAND AND GRAVEL, CRUSHED ROCK AND/OR DECOMPOSED GRANITE WITH ENOUGH BINDER MATERIAL SO THAT IT CAN BE TIGHTLY COMPACTED AND SHALL HAVE A PLASTICITY INDEX NOT IN EXCESS OF 6 AND SHALL CONFORM TO GRADATION AS REQUIRED BY THE COTTONWOOD CITY ENGINEER. THE WORK AND CONSTRUCTION SHALL BE IN ACCORDANCE WITH SECTION 702 OF MAG STANDARD SPECIFICATIONS.
8. BASE MATERIAL SHALL BE PLACED IN UNIFORM LAYERS NOT TO EXCEED 6" IN DEPTH. EACH LAYER SHALL BE BLADED TO A SMOOTH SURFACE CONFORMING TO THE CROSS SECTION SHOWN ON THE PLANS AND SHALL BE WATERED AND THOROUGHLY ROLLED IN A MANNER SATISFACTORY TO THE COTTONWOOD CITY ENGINEER.
9. ASPHALT CONCRETE REQUIREMENTS SHALL BE IN ACCORDANCE WITH SECTION 409 OF ADOT STANDARD SPECIFICATIONS OR SECTION 321 OF MAG STANDARD SPECIFICATIONS. MIX DESIGN SHALL BE SUBMITTED TO THE CITY ENGINEER FOR REVIEW AND APPROVAL.
10. ASPHALTIC CONCRETE SHALL BE COMPACTED TO NOT LESS THAN 95.0 PERCENT OF LABORATORY DENSITY. THE LABORATORY DENSITY WILL BE DETERMINED BY THE CONTRACTOR'S ENGINEER BASED UPON FIELD SAMPLES IN ACCORDANCE WITH THE REQUIREMENTS OF AASHTO T-245, 75 BLOW MARSHALL DENSITY.
11. CORE SAMPLES SHALL BE TAKEN BY THE CONTRACTOR AT RANDOM LOCATIONS IN ACCORDANCE WITH QUALITY CONTROL TESTING.
12. WHEN THE AVERAGE PERCENT OF COMPACTION IS LESS THAN 95.0%, THE CONTRACTOR WILL BE REQUIRED TO REMOVE AND REPLACE ANY PORTIONS, AT THE SOLE DISCRETION OF THE COTTONWOOD CITY ENGINEER.
13. ALL NEW STREETS SHALL BE CHIP SEALED, UNLESS OTHERWISE DIRECTED, PER THE FOLLOWING SPECIFICATION:
    THE CHIP SEAL COAT SHALL CONSIST OF EMULSIFIED ASPHALT, TYPE CRS-2 (OR EQUIVALENT), APPLIED AT A RATE OF 0.30 TO 0.40 GALLONS PER SQUARE YARD AND $\frac{3}{8}$ INCH CHIP COVER AGGREGATE. EMULSIFIED ASPHALT SHALL BE APPLIED TO THE SURFACE OF THE ROAD IN ACCORDANCE WITH SECTION 404-3.05 OF THE ADOT STANDARD SPECIFICATIONS. EMULSIFIED ASPHALT, TYPE CRS-2 OR EQUIVALENT SHALL CONFORM TO SECTION 1005-3.03 AND TABLE 1005-5 OF ADOT STANDARD SPECIFICATIONS.
14. CHIP SEAL COAT SHALL NOT BE APPLIED FOR A MINIMUM OF 14 DAYS AFTER COMPLETION OF THE ASPHALTIC CONCRETE.
15. THE COVER MATERIAL SHALL CONFORM TO ADOT STANDARD SPECIFICATION SECTION 404-2.02 TO THE FOLLOWING GRADATION AND SHALL BE AN AGGREGATE MIX OF CLEAN SAND, GRAVEL OR CRUSHED ROCK AND SHALL BE FREE OF LUMPS OR BALLS OF CLAY, CONTAIN NO CALCAREOUS, CLAY OR DUST COATINGS, CALICHE, SYNTHETIC MATERIALS, DECOMPOSED GRANITE, VOLCANIC CINDERS, ORGANIC MATTER, OR FOREIGN SUBSTANCES. IF A CLEAN COVER MATERIAL CANNOT BE ACHIEVED USING CONVENTIONAL CRUSHING AND SCREENING METHODS, THEN THE COVER MATERIAL WILL HAVE TO BE WASHED IN WATER. THE COVER MATERIAL SHALL BE APPLIED AT A RATE OF 25 TO 30 POUNDS PER SQUARE YARD.
16. THE COVER MATERIAL GRADATION SHALL MEET THE FOLLOWING REQUIREMENTS WHEN TESTED IN ACCORDANCE WITH THE REQUIREMENTS OF ARIZONA TEST METHOD 201.

SIEVE SIZE	% BY WEIGHT PASSING SIEVES
NO, 4	0 - 25
NO. 8	0 - 5
NO. 200	0 - 2

17. THE CONTRACTOR IS RESPONSIBLE FOR ALL LABORATORY TEST AND CERTIFICATIONS TO ASSURE THAT THE CHIP MATERIAL IS IN CONFORMANCE TO THE REQUIREMENTS SET FORTH IN THESE SPECIFICATIONS.
18. REPRESENTATIVE SAMPLES OF THE AGGREGATE COVER MATERIAL SHALL BE TAKEN DAILY, AND THE LABORATORY TEST RESULTS AND CERTIFICATES OF COMPLIANCE, CERTIFIED BY THE CONTRACTOR'S ENGINEER, SHALL BE SUBMITTED TO THE COTTONWOOD CITY ENGINEER. THE CITY ENGINEER MAY REJECT DELIVERED CHIP MATERIAL IF, IN HIS OPINION, THE DELIVERED MATERIAL DIFFERS SIGNIFICANTLY FROM THE REPRESENTATIVE SAMPLE.
19. THE CONTRACTOR SHALL BE RESPONSIBLE FOR SUCCESSFUL PLACEMENT OF THE SHIP SEAL COAT REGARDLESS OF TEMPERATURES OR MATERIAL COMPLIANCE, AND SHALL GUARANTEE THE SUCCESS OF THE CHIP SEAL COAT PER MAG SPECIFICATION SECTION 330. THE CONTRACTOR SHALL COMPLY WITH ADOT STANDARD SPECIFICATIONS SECTION 404-3.14 FOR DATES AND ELEVATIONS OF PLACEMENT.
20. THE CONTRACTOR SHALL HAVE EACH INDIVIDUAL ROAD SWEPT WITHIN 24 HOURS OF THE COMPLETION OF THE CHIP SEAL. THE CONTRACTOR SHALL MAINTAIN TRAFFIC CONTROL AND LOOSE GRAVEL SIGNS UNTIL ALL SWEEPING HAS BEEN COMPLETED.
21. BLOTTING SHALL BE DONE WHEREVER AND WHENEVER NECESSARY, WITH A NATURAL MATERIAL APPROVED BY THE CITY ENGINEER. ALL EXCESS BLOTTER MATERIAL SHALL BE SWEPT AWAY AND SURFACE OF THE BITUMINOUS ROADWAY SHALL BE REASONABLY CLEAN AND FREE OF ALL LOOSE MATERIAL BEFORE THE SEAL COAT MAY BE APPLIED.

CITY OF COTTONWOOD STANDARD DETAIL	PAVING NOTES	CITY ENGINEER	REVISED	DETAIL NO.
			08/18	1103

1. ALL PROJECT MATERIALS AND WORKMANSHIP SHALL COMPLY WITH THE MARICOPA ASSOCIATION OF GOVERNMENTS (MAG) STANDARD SPECIFICATIONS AND COTTONWOOD ENGINEERING DESIGN STANDARDS MANUAL AND THESE COTTONWOOD MUNICIPAL WATER SYSTEMS (CMWS) STANDARDS AND SPECIFICATIONS, THE APPROVED CONSTRUCTION PLANS AND SPECIFICATIONS, TOGETHER WITH GENERALLY ACCEPTED GOOD CONSTRUCTION PRACTICES.
2. THE CITY OF COTTONWOOD ENGINEERING DEPARTMENT, INSPECTION STAFF, WILL CONDUCT INSPECTIONS OF ALL OF THE PROPOSED IMPROVEMENTS. THESE REQUIRED INSPECTIONS WILL INCLUDE BUT NOT BE LIMITED TO THE FOLLOWING:
   A. PRE–EXCAVATION LOCATION OF THE PROPOSED TRENCH AND ANY PROPOSED SAWCUTTING OF ASPHALT OR CONCRETE. VERIFICATION OF BLUE STAKE COMPLETION WILL ALSO BE DONE AT THIS TIME.
   B. EXCAVATED DEPTH AND TRENCH SUBGRADE PREPARATION. ANY CROSSED UTILITIES (PUBLIC OR PRIVATE) WILL BE INSPECTED AT THIS TIME TO ASSURE NO DAMAGE OCCURRED DURING EXCAVATION. THE CONTRACTOR SHALL BE RESPONSIBLE TO OVERSEE THE REPAIR OF ANY DAMAGE TO ANY UTILITY THAT OCCURRED FROM THE EXCAVATION, CONSTRUCTION, AND BACKFILL OF THE PROPOSED WATERLINE TO THE SATISFACTION OF THAT RELATIVE UTILITY.
   C. THE PLACEMENT OF TRENCH BOTTOM BEDDING INCLUDING QUALITY OF MATERIALS, THICKNESS, MOISTURE, AND COMPACTION IN ACCORDANCE TO THE PIPE BEDDING AND TRENCH DETAIL IN THE APPROVED PLANS.
   D. THE INSTALLATION AND ASSEMBLY OF THE PROPOSED PIPE AND FITTINGS IN THE TRENCH ATOP THE TRENCH BOTTOM BEDDING. THIS WILL INCLUDE BUT NOT BE LIMITED TO INSPECTING THAT BEDDING HAS BEEN HAND REMOVED BELOW BELLS FOR FLUSH FIT ATOP TRENCH BOTTOM BEDDING, THAT PIPE ENDS HAVE BEEN MARKED AND THEN INSERTED INTO BELL ENDS FOR THE APPROPRIATE DEPTHS, THAT FITTINGS AND PIPE ARE PROPERLY ALIGNED AND BOLTED TOGETHER AS REQUIRED, THAT TRACING WIRE IS INSTALLED AS REQUIRED, THAT ALL DUCTILE IRON FITTINGS AND PIPE ARE WRAPPED AS REQUIRED, AND THAT ALL ITEMS ARE REASONABLY CENTERED IN THE TRENCH SO THAT BEDDING MATERIAL CAN BE PLACED ALONG THE SIDES OF THE PIPE AS REQUIRED BY THE PIPE BEDDING AND TRENCH DETAIL IN THE APPROVED PLANS
   E. THAT THE WATERLINE AND FITTINGS ARE APPROPRIATELY BEDDED AROUND AND OVER AS REQUIRED BY THE PIPE BEDDING AND TRENCH DETAIL IN THE APPROVED PLANS INCLUDING QUALITY OF BEDDING MATERIAL, WIDTH/THICKNESS, MOISTURE, AND COMPACTION PER TABLE #1 BELOW.
   F. THAT TRACER WIRE IS INSTALLED UNDER THE CENTER LINE OF THE PIPE AND IS NOT DAMAGED DURING CONSTRUCTION. BEFORE ACCEPTANCE FOR THE JOB TRACER WIRE WILL BE CHECKED FOR CONTINUITY. DAMAGED WIRE WILL BE REPAIRED AT THE CONTRACTOR'S EXPENSE.
   G. THAT "BURIED WATERLINE" LABELED DETECTOR TAPE IS INSTALLED PROPERLY ATOP THE FIRST COMPACTED LIFT OF NATIVE MATERIAL ABOVE THE TOP OF PIPE BEDDING AND DIRECTLY ABOVE THE CENTERLINE OF THE BURIED WATERLINE.
   H. THAT NATIVE BACKFILL USED ABOVE THE BEDDING IS CAREFULLY PROCESSED TO REMOVE ALL ROCK LARGER THAN 3" DIAMETER AND OBTAIN THE APPROPRIATE MOISTURE AND THEN CAREFULLY PLACED IN EVEN AND UNIFORM LIFTS IN THE TRENCH AND COMPACTED TO THE DENSITY REQUIRED TO SATISFY BOTH MAG SPECIFICATIONS IN SECTION 601 AND ADOT REQUIREMENTS FOR WORK IN THEIR RIGHT OF WAY. THE ALLOWABLE DEPTH OF LIFT WILL BE DETERMINED BY THE CAPABILITIES OF THE COMPACTION EQUIPMENT PROVIDED BY THE CONTRACTOR. DENSITIES OF TRENCH BACKFILL WILL BE CHECKED BY CITY OF COTTONWOOD CITY ENGINEER OR DESIGNEE AT THE FOLLOWING VERTICAL AND HORIZONTAL INTERVALS:

TABLE #1

MATERIAL/LOCATION	TEST INTERVAL–VERT*	TEST INTERVAL–HORIZ*
PIPE BEDDING BASE	TOP OF LIFT	EVERY 350' OR DAILY (WHICHEVER IS LESS)
PIPE BEDDING	12" ABOVE TOP OF PIPE & AT TOP OF BEDDING	EVERY 350' OR DAILY (WHICHEVER IS LESS)
TRENCH BACKFILL ABOVE BEDDING	EVERY 18" OF VERTICAL FILL	EVERY 350' OR DAILY (WHICHEVER IS LESS)
TRENCH BACKFILL IN DRIVEWAYS	EVERY LIFT	AT EVERY DRIVEWAY LOCATION

3. THE CONTRACTOR IS RESPONSIBLE TO PROVIDE AN ACCURATE SET OF "AS–BUILT" PLANS TO THE CITY OF COTTONWOOD CITY ENGINEER PRIOR TO THE FINAL ACCEPTANCE OF THE PROJECT WORK. THESE AS–BUILT PLANS SHALL ACCURATELY SHOW THE LOCATIONS OF ALL CONSTRUCTED WATERLINES, FITTINGS, VALVES, BLOCKING, AND TIE–IN POINTS WITH THEIR RELATIONSHIP TO RIGHT OF WAY BOUNDARIES, LOT LINES, OR OTHER POINTS OF SURVEY.
4. THE CONTRACTOR IS RESPONSIBLE FOR MAINTAINING THE SURVEY ACCURACY OF ALL OF THE PROPOSED WORK AT THEIR EXPENSE. THE PROPOSED WORK SHALL BE STAKED BY USE OF MONUMENTATION THAT IS ACCEPTABLE TO THE CITY OF COTTONWOOD CITY ENGINEER.
5. THE CONTRACTOR SHALL BE RESPONSIBLE TO "POT–HOLE" OR UNCOVER ALL EXISTING WATER LINE TIE–IN POINTS TO VERIFY THEIR SIZE, MATERIAL, LOCATION AND DEPTH PRIOR TO TRENCHING FOR NEW WATER LINE CONSTRUCTION. THE CONTRACTOR SHALL ALSO LOCATE OR HAVE LOCATED ALL EXISTING UNDERGROUND PIPES, CONDUITS, AND UTILITIES PRIOR TO CONSTRUCTION.
6. ALL WATER MAIN PIPING SHALL BE DUCTILE IRON PRESSURE CLASS 350 ENCASED IN POLYETHYLENE SLEEVING, OR PVC C–900 CLASS DR14 AS SHOWN IN THE APPROVED PLANS.
7. ALL FITTINGS SHALL BE DOMESTIC ONLY AND COMPLY WITH AWWA STANDARDS. ALL VALVE BOXES SHALL BE "TYLER" ONLY.
8. WATER MAINS SHALL BE BURIED FOR A MINIMUM DEPTH OF 36–INCHES FOR PIPE DIAMETERS 10–INCHES OR LESS AND A MINIMUM OF 48–INCHES FOR PIPES WITH A DIAMETER GREATER THAN 10–INCHES UNLESS SHOWN DIFFERENTLY IN THE APPROVED PLANS OR APPROVED IN WRITING FROM THE CITY ENGINEER. THE DEPTH SHOWN IN PLANS IS ASSUMED TO BE THE MINIMUM DEPTH.
9. ALL WATER LINES AND FITTINGS SHALL BE BEDDED AND SHADED ABOVE, BELOW, AND AROUND WITH AN APPROVED ROCK FREE, SANDY BEDDING MATERIAL PER THE PIPE BEDDING AND TRENCH DETAIL IN THE APPROVED PLANS.

CITY OF COTTONWOOD STANDARD DETAIL	POTABLE WATER NOTES	CITY ENGINEER	REVISED	DETAIL NO.
			08/18	1104–1

10. THE CONTRACTOR SHALL PROVIDE A BLUE COATED #12 COPPER TRACER WIRE SECURED TO THE BOTTOM CENTERLINE OF ALL WATER LINES AND SERVICES. THE CONTRACTOR SHALL PROVIDE A LOOPED PIGTAIL AT ALL IN-LINE VALVE LOCATIONS. TRACER WILL BE INSPECTED FOR CONTINUITY PRIOR TO ACCEPTANCE OF THE WORK. NON-CONTINUOUS OR FAULTY WIRE WILL BE REPAIRED AT THE CONTRACTOR'S EXPENSE.
11. ALL SERVICE LINES THAT ARE UNDER PAVEMENT OR CONCRETE SHALL BE SLEEVED IN 4-INCH CLASS 160 PVC CONDUITS OR APPROVED EQUAL. SERVICE LINES ARE TO BE CONSTRUCTED WITH CROSS-LINKED POLYETHYLENE PIPING.
12. ALL WATER LINE ENDS SHALL BE PROVIDED WITH AN APPROVED 2" FLUSH VALVE (BLOWOFF) PER MAG STANDARD DETAIL OR AS SHOWN IN THE APPROVED PLANS.
13. ALL FIRE HYDRANT HOSE AND STEAMER CONNECTIONS SHALL MATCH STANDARD SIZE AND THREADS PER THE COTTONWOOD FIRE DEPARTMENT.
14. ALL FRAMES, COVERS, VALVE BOXES, VAULT LIDS, ETC., SHALL BE PROPERLY ADJUSTED TO FINISH GRADE WITH THE SURROUNDING GRADE OR PAVING AFTER THE COMPLETION OF PAVING AND GRADING.
15. THE CONTRACTOR SHALL DISINFECT EVERY PART OF THE NEWLY CONSTRUCTED WATER SYSTEM PER ARIZONA DEPARTMENT OF ENVIRONMENTAL QUALITY BULLETIN #8.
16. THE CONTRACTOR SHALL PROVIDE BACTERIOLOGICAL TESTING OF THE NEWLY CONSTRUCTED WATER SYSTEM PER ARIZONA DEPARTMENT OF ENVIRONMENTAL QUALITY BULLETIN #8 AND THE COTTONWOOD CITY ENGINEER OR DESIGNEE.
17. THE CONTRACTOR SHALL PERFORM PRESSURE TESTING OF THE NEWLY CONSTRUCTED WATER SYSTEM AT THE DIRECTION OF THE CITY OF COTTONWOOD CITY ENGINEER OR DESIGNEE IN ACCORDANCE WITH AWWA STANDARDS. ALL LEAKS THAT ARE FOUND WILL BE REPAIRED AND RETESTED FOR PRESSURE BY THE CONTRACTOR PRIOR TO THE SYSTEM BEING PLACED INTO SERVICE. IF NECESSARY, THE SYSTEM MAY NEED TO BE ONCE AGAIN DISINFECTED AND MAY NEED TO UNDERGO BACTERIOLOGICAL TESTING AT THE CONTRACTOR'S EXPENSE PRIOR TO IT BEING PLACED IN SERVICE.
18. THE CITY OF COTTONWOOD ENGINEERING DEPARTMENT, INSPECTION STAFF, SHALL BE NOTIFIED 48 HOURS PRIOR TO THE START OF CONSTRUCTION SO THAT INSPECTIONS MAY BE SCHEDULED.
19. ALL WORK AND MATERIALS THAT DO NOT CONFORM TO THESE SPECIFICATIONS OR THE APPROVED PLANS ARE SUBJECT TO REMOVAL AND REPLACEMENT TO MATCH THESE APPROVED PLANS UNDER THE DIRECTION OF THE CITY OF COTTONWOOD ENGINEERING DEPARTMENT, INSPECTION STAFF, AT THE CONTRACTOR'S EXPENSE.
20. ALL WORK DONE BY THE CONTRACTOR SHALL BE SUBJECT TO INSPECTION BY THE CITY OF COTTONWOOD ENGINEERING DEPARTMENT, INSPECTION STAFF, PRIOR TO BURIAL. ANY WORK PERFORMED WITHOUT THE KNOWLEDGE OF THE CITY OF COTTONWOOD INSPECTION STAFF IS SUBJECT TO EXCAVATION AND INSPECTION, REMOVAL, REPLACEMENT, OR REPAIR AT THE DIRECTION OF THE CITY OF COTTONWOOD ENGINEERING DEPARTMENT, INSPECTION STAFF, SOLELY AT THE CONTRACTOR'S EXPENSE. REPAIR OF ANY DAMAGE DONE DURING THIS TYPE OF RE-EXPOSURE AND REQUIRED RE-TESTING, ETC., IS SOLELY THE RESPONSIBILITY OF THE CONTRACTOR.
21. ALL VAULTS OR OTHER UNDERGROUND STRUCTURES WILL BE PLACED ATOP SUBGRADE AND BASE COURSE PLACED AND COMPACTED TO 95% MDD, TO THE SATISFACTION OF THE CITY OF COTTONWOOD ENGINEERING DEPARTMENT, INSPECTION STAFF.
22. ALL PLASTIC PIPES SHALL BEAR THE SEAL BY THE NATIONAL SANITATION FOUNDATION.
23. ALL MATERIALS AND PRODUCTS THAT COME INTO CONTACT WITH WATER OR WATER TREATMENT CHEMICALS SHALL CONFORM TO ANSI/NSF STANDARD 61.
24. ALL CONSTRUCTION MATERIALS USED IN A PUBLIC WATER SYSTEM INCLUDING ALL RESIDENTIAL AND NON-RESIDENTIAL FACILITIES WHICH WILL BE CONNECTED TO SAID PUBLIC WATER SYSTEM, SHALL BE LEAD-FREE AS DEFINED BY R18-4-101.
25. WHEN ANY SEWER CROSSES A WATER PIPE AT A POINT AT WHICH THE SEWER IS 2 FEET OR MORE BELOW THE WATER MAIN, NO EXTRA PROTECTION OUTSIDE OF THE VERTICAL SEPARATION IS REQUIRED PER (ACC R18-4-502C). AT ALL OTHER CROSSINGS THE SEWER SHALL BE CONSTRUCTED OF DUCTILE IRON PIPE WITH MECHANICAL JOINTS FOR A DISTANCE OF AT LEAST 10 FEET IN EACH DIRECTION, MEASURED PERPENDICULAR TO THE WATER LINE. SAID SEWER SHALL BE ENCASED IN CONCRETE FOR A MINIMUM OF 6-INCHES ALL THE WAY AROUND FOR THE SAME SPECIFIED DISTANCE OR AS SHOWN ON MAG SEPARATION DETAIL 404.
26. SUBMITTAL OF AN ENGINEER'S CERTIFICATE OF COMPLETION IS REQUIRED BY ADEQ FOR ALL WATER AND SEWER SYSTEM CONSTRUCTION.
27. THE MINIMUM COVER FROM FINISH GRADE TO TOP OF PIPE FOR ALL POTABLE WATERLINES WHICH ARE 12-INCHES IN DIAMETER OR LESS LOCATED IN MAJOR STREETS SHALL BE AS SPECIFIED BY THE DESIGN ENGINEER, BUT NO LESS THAN 36 INCHES UNLESS SHOWN DIFFERENTLY ON THESE APPROVED PLANS.
28. THE MINIMUM COVER FROM FINISH GRADE TO TOP OF PIPE FOR POTABLE WATERLINES WHICH ARE GREATER THAN 12-INCHES IN DIAMETER, LOCATED IN MAJOR STREETS SHALL BE AS SPECIFIED BY THE DESIGN ENGINEER, BUT NO LESS THAN 48-INCHES, UNLESS SHOWN DIFFERENTLY ON THESE APPROVED PLANS.

CITY OF COTTONWOOD STANDARD DETAIL	POTABLE WATER NOTES	CITY ENGINEER	REVISED	DETAIL NO.
			08/18	1104-2

1. ALL RECLAIMED WATER MAIN PIPING SHALL BE PURPLE PVC C-900 CLASS DR14 AS SHOWN IN THE APPROVED PLANS.
2. ALL PLASTIC PIPES SHALL BEAR THE SEAL BY THE NATIONAL SANITATION FOUNDATION.
3. ALL FITTINGS SHALL BE DOMESTIC ONLY AND COMPLY WITH AWWA STANDARDS. ALL VALVE BOXES SHALL BE "TYLER" ONLY.
4. RECLAIMED WATERLINE AND GRADE STAKES SHALL BE SET BY A QUALIFIED ARIZONA REGISTERED LAND SURVEYOR AND/OR THEIR REPRESENTATIVE PRIOR TO CONSTRUCTION. THE QUALIFIED ARIZONA REGISTERED LAND SURVEYOR AND/OR THEIR REPRESENTATIVE SHALL VERIFY THAT THE GRADES CONFORM TO THE APPROVED CONSTRUCTION PLANS, AND PROVIDE CUT SHEETS TO THE CONTRACTOR AND COTTONWOOD CITY ENGINEER. AFTER INSTALLATION AND PRIOR TO THE CITY OF COTTONWOOD ENGINEERING DEPARTMENT ACCEPTANCE, THE ENGINEER OF RECORD SHALL CERTIFY THAT THE INSTALLATION CONFORMS TO THE APPROVED CONSTRUCTION PLANS.
5. TRENCH EXCAVATION, BACKFILLING AND COMPACTION SHALL CONFORM TO MAG STANDARD SPECIFICATION SECTION 601 OR AS SHOWN ON THESE APPROVED PLANS.
6. BEDDING AND BACKFILL MATERIAL FOR RECLAIMED AND NON-POTABLE WATER LINES SHALL CONFORM TO THE SAME REQUIREMENTS OF THE CITY OF COTTONWOOD FOR POTABLE WATERLINE INSTALLATION.
7. THE MINIMUM COVER FROM FINISH GRADE TO TOP OF PIPE FOR ALL RECLAIMED AND NON-POTABLE WATERLINES WHICH ARE 12-INCHES IN DIAMETER OR LESS LOCATED IN MAJOR STREETS SHALL BE AS SPECIFIED BY THE DESIGN ENGINEER, BUT NO LESS THAN 36-INCHES UNLESS SHOWN DIFFERENTLY ON THE APPROVED PLANS.
8. THE MINIMUM COVER FROM FINISH GRADE TO TOP OF PIPE FOR RECLAIMED AND NON-POTABLE WATERLINES WHICH ARE GREATER THAN 12-INCHES IN DIAMETER, LOCATED IN MAJOR STREETS SHALL BE AS SPECIFIED BY THE DESIGN ENGINEER, BUT NO LESS THAN 48-INCHES, UNLESS SHOWN DIFFERENTLY ON THE APPROVED PLANS.
9. THE MINIMUM COVER FROM FINIS GRADE TO TOP OF PIPE FOR ALL RECLAIMED AND NON-POTABLE WATERLINES IN OTHER LOCATIONS SHALL BE AS SPECIFIED BY THE DESIGN ENGINEER, NUT NO LESS THAN 36-INCHES (FOR LINES LESS THAN 12-INCHES IN DIAMETER), AND NO LESS THAN 48-INCHES (FOR 12-INCH DIAMETER AND LARGER LINES), UNLESS SHOWN OTHERWISE ON THE APPROVED PLANS.
10. ALL STUB-OUTS SHALL HAVE A 2-INCH BRASS BALL CORP. STOP AS A BLOWOFF, LEFT IN PLACE WITH A 2-INCH RISER, PER MAG STANDARD DETAIL 390 "A", AND SHALL BE ACCESSIBLE TO USE.
11. ALL VALVES 16-INCHES AND SMALLER SHALL BE PER MAG 630 WITH RESILIENT SEAT AWWA APPROVED GATE VALVES AND SHALL OPEN BY TURNING COUNTER-CLOCKWISE.
12. VALVES SHALL NOT BE LOCATED IN SIDEWALKS, GUTTERS, CURB, OR VALLEY GUTTERS, UNLESS PREAPPROVED BY THE CITY ENGINEER.
13. ALL VALVE BOXES SHALL CONFORM TO MAG STANDARD DETAIL 391-1, TYPE A. ALL RECLAIMED WATER VALVE BOXES SHALL UTILIZE SQUARE COVERS WITH THE WORDS "RECLAIMED WATER" IMPRINTED ON THEM. COVERS SHALL BE PAINTED "RECLAIMED WATER" PURPLE UTILIZING AN ACCEPTABLE PAINT AS APPROVED BY THE COTTONWOOD CITY ENGINEER.
14. CONTRACTORS SHALL NOT OPERATE VALVES ON THE EXISTING CITY SYSTEM.
15. TO REQUEST A RECLAIMED WATER SYSTEM SHUT DOWN A "WATER SYSTEM SHUT DOWN REQUEST" FOR MUST BE SUBMITTED. THIS FORM SHALL BE SUBMITTED TEN DAYS IN ADVANCE OF ANY REQUESTS TO SHUT DOWN ANY LINES IN THE CITY OF COTTONWOOD'S DISTRIBUTION SYSTEM. THE FORM IS TO BE SUBMITTED THROUGH THE ENGINEERING INSPECTOR ASSIGNED TO THE PROJECT, WHO WILL IN TURN COORDINATE THE NECESSARY UTILITY STAFF. FAILURE TO COMPLETE THIS FORM MAY RESULT IN DELAYS TO CONSTRUCTION ACTIVITIES.
16. NEW RECLAIMED WATERLINES MUST MAINTAIN MINIMUM SEPARATION (BOTH VERTICAL AND HORIZONTAL) FROM POTABLE WATERLINES AND SEWER MAINS PER MAG SPECIFICATION SECTION 610.5 AND THE MAG STANDARD DETAIL 404 EXCEPT AS MODIFIES: WHEN IT COMES TO SEPARATION FROM SEWER MAINS, RECLAIMED AND NON-POTABLE WATERLINES SHALL USE THE SAME REQUIREMENTS AS POTABLE WATERLINES. WHEN IT COMES TO SEPARATION FROM POTABLE WATERLINES, RECLAIMED AND NON-POTABLE WATERLINES SHALL USE THE SAME REQUIREMENTS AS SEWER LINES.
17. ALL RECLAIMED WATERLINES REQUIRE THE INSTALLATION OF METALLIC LOCATING TAPE, WHICH SHALL BE INSTALLED IN ACCORDANCE WITHE MAG SPECIFICATION SECTION 616.4. THE REQUIRED COLOR FOR RECLAIMED WATER PIPELINES IS RECLAIMED WATER PURPLE.
18. PRIOR TO BEING PUT INTO SERVICE, NEW RECLAIMED WATERLINES SHALL BE DISINFECTED AND TESTED PER ADEQ BULLETIN #8.
19. ALL FIRE HYDRANT HOSE AND STEAMER CONNECTIONS SHALL MATCH STANDARD SIZE AND THREADS PER THE LOCAL FIRE DEPARTMENT.
20. ALL ABOVE GROUND RECLAIMED WATER INFRASTRUCTURE (ABOVE AND BELOW GROUND) SHALL BE RECLAIMED WATER PURPLE IN COLOR.
21. ALL NEW LANDSCAPE AND TURF IRRIGATION INFRASTRUCTURE (ABOVE AND BELOW GROUND) SHALL BE RECLAIMED WATER PURPLE IN COLOR.
22. THE CONTRACTOR SHALL PROVIDE A PURPLE COATED #10 COPPER TRACER WIRE SECURED TO THE BOTTOM CENTERLINE OF ALL RECLAIMED WATERLINES AND SERVICE. THE CONTRACTOR SHALL PROVIDE A LOOPED PIGTAIL AT ALL IN-LINE VALVE LOCATIONS. TRACER WIRE WILL BE INSPECTED FOR CONTINUITY PRIOR TO ACCEPTANCE OF THE WORK. NON-CONTINUOUS OF FAULTY WIRE WILL BE REPAIRED AND THE CONTRACTOR'S EXPENSE.

CITY OF COTTONWOOD STANDARD DETAIL	RECLAIMED WATER NOTES	CITY ENGINEER	REVISED	DETAIL NO.
			08/18	1105

1. ALL FRAMES, COVERS, VALVE BOXES AND MANHOLES SHALL BE ADJUSTED TO FINISHED GRADE UPON COMPLETION OF PAVING OR RELATED CONSTRUCTION PER COTTONWOOD STANDARD DETAIL 1422.
2. THE CONTRACTOR SHALL PROVIDE SUFFICIENT MEN AND EQUIPMENT ON THE JOB AT ALL TIMES TO ASSURE PUBLIC SAFETY AND COMPLY WITH THE CONSTRUCTION SPECIFICATIONS.
3. INSULATED TRACER WIRE (BRIGHT GREEN COATED, #10, SOLID COPPER) SHALL BE PLACED UNDER MANHOLE FRAMES, CLEANOUTS, AND EXTEND ALONG MAINS AND LATERALS. ALL SPLICES SHALL BE WATER TIGHT. TRACER WIRE SHALL NOT ELECTRICALLY GO TO GROUND.
4. IT IS THE CONTRACTOR'S RESPONSIBILITY TO LOCATE ALL UNDERGROUND FACILITIES IN ADVANCE OF CONSTRUCTION AND TAKE ALL PRECAUTIONS NECESSARY TO AVOID DAMAGE TO THESE FACILITIES.
5. SEWER CASINGS SHALL BE MANUFACTURED IN NORTH AMERICA OR APPROVED SPECIFICALLY BY THE CITY.
6. THE CONTRACTOR IS RESPONSIBLE TO SCHEDULE AND PAY FOR VIDEO INSPECTION OF ALL PUBLIC SANITARY SEWER MAINLINES PER ORDINANCE NO. 362.
7. SANITARY SEWER PIPE AND MANHOLES SHALL BE TESTED ACCORDING TO THE FOLLOWING STANDARDS:
   A. MANHOLE
      THE CONTRACTOR SHALL TEST ALL MANHOLES USING THE FOLLOWING TEST PROTOCOL:
      1. AIR PRESSURE TESTING USING THE "STANDARD TEST METHOD FOR CONCRETE SEWER MANHOLES BY NEGATIVE AIR PRESSURE (VACUUM) TEST," PUBLISHED BY THE AMERICAN SOCIETY FOR TESTING AND MATERIALS, (C 1244-93), APPROVED AUGUST 15, 1993.
      2. THE CONTRACTOR SHALL PERFORM MANHOLE TESTING AFTER INSTALLATION OF THE MANHOLE CONE TO VERIFY WATERTIGHTNESS OF THE MANHOLE FROM THE TOP OF THE CONE DOWN, UPON SATISFACTORY TEST RESULTS, THE CONTRACTOR SHALL INSTALL THE MANHOLE RING AND ANY SPACERS, COMPLETE THE JOINTS, AND SEAL THE MANHOLE TO A WATERTIGHT CONDITION. IF THE MANHOLE CONE, SPACERS, AND RING CAN BE INSTALLED TO FINAL GRADE WITHOUT THE DISTURBANCE OR ADJUSTMENT BY LATER CONSTRUCTION, THE CONTRACTOR MAY PERFORM THE TESTING FROM THE TOP OF THE MANHOLE RING DOWN.
   B. LEAKAGE TESTING
      THE CONTRACTOR SHALL TEST EACH SEGMENT OF THE SEWER LINE FOR LEAKAGE USING THE METHOD BELOW AND RECORD THE RESULTS:
      1. "STANDARD TEST METHOD FOR INSTALLATION OF ACCEPTANCE OF PLASTIC GRAVITY SEWER LINES USING LOW-PRESSURE AIR" PUBLISHED BY THE AMERICAN SOCIETY FOR TESTING AND MATERIALS, (F1417-92), REAPPROVED 1998.
   C. DEFLECTION TESTING
      THE CONTRACTOR SHALL PERFORM A DEFLECTION TEST OF THE TOTAL LENGTH OF ALL SEWER LINES MADE OF FLEXIBLE MATERIALS TO ENSURE THAT THE INSTALLATION MEETS OR EXCEEDS THE MANUFACTURER'S RECOMMENDATIONS AND RECORD THE RESULTS.

      ANY PART OF THE INSTALLATION WHICH SHOWS DEFLECTION IN EXCESS OF 5% OF THE NOMINAL INSIDE DIAMETER PER MAG SECTION 738 FOR HDPE PIPE OR IN EXCESS OF 5% OF THE AVERAGE INSIDE DIAMETER PER ASTM D-3034 FOR PVC PIPE SHALL BE CORRECTED.
   D. UNIFORM SLOPE
      THE CONTRACTOR SHALL TEST THE TOTAL LENGTH OF THE SEWER LINE FOR UNIFORM SLOPE BY VISUALLY INSPECTING THE INTERIOR OF THE SEWER LINE USING A TELEVISION CAMERA AND RECORD THE RESULTS. THE CONTRACTOR SHALL COORDINATE THE TESTING WITH THE CITY OF COTTONWOOD.
8. SDR 21 PVC PIPE AND SDR 26 PVC PIPE, AND DUCTILE IRON PIPE WITH SPECIAL SEWER COATINGS ARE ALLOWED MATERIALS PER ORDINANCE NO. 371.

CITY OF COTTONWOOD STANDARD DETAIL	SANITARY SEWER NOTES	CITY ENGINEER	REVISED	DETAIL NO.
			08/18	1106

1. WEATHER INFORMATION AND STORM PREDICTIONS CAN BE OBTAINED BY CALLING THE NATIONAL WEATHER SERVICE - FLAGSTAFF WEATHER FORECAST OFFICE AT 928.556.9161 OF BY VISITING THE NATIONAL WEATHER SERVICE WEBSITE AT HTTP://WWW.WRH.NOAA.GOV/FGZ
2. PERMANENT EROSION CONTROL MEASURES SHALL BE INSTALLED AS AREAS ARE DETERMINED TO BE COMPLETE.
3. ALL DRAINAGE INLETS RECEIVING RUNOFF FROM DISTURBED SOIL AREAS SHALL BE PROTECTED WITH AN APPROVED SEDIMENT TRAP INLET PROTECTION MEASURE OR BMP.
4. A COPY OF THE APPROVED GRADING & DRAINAGE PLAN FOR THIS PROJECT, TOGETHER WITH A COPY OF THE NOTICE OF INTENT (NOI) AND THIS STORMWATER POLLUTION PREVENTION PLAN (SWPPP), SHALL BE MAINTAINED ON THE SITE AND AVAILABLE FOR REVIEW AT ALL TIMES. THOSE ELEMENTS OF THE GRADING & DRAINAGE PLAN PERTINENT TO OR REFERENCED ON THE STORMWATER POLLUTION PREVENTION PLAN (SWPPP) SHALL BE CONSIDERED A PART OF THE SWPPP.
5. THE NOTICE OF INTENT (NOI) SHALL BE COMPLETED AND SUBMITTED TO THE ARIZONA DEPARTMENT OF ENVIRONMENTAL QUALITY (ADEQ) AND THE CITY OF COTTONWOOD AT LEAST 48 HOURS PRIOR TO ANY CONSTRUCTION ACTIVITY.
6. THE STORMWATER POLLUTION PREVENTION PLAN (SWPPP) AND RELATED RECORDS SHALL BE MADE AVAILABLE UPON REQUEST TO THE ARIZONA DEPARTMENT OF ENVIRONMENTAL QUALITY (ADEQ) AND THE CITY OF COTTONWOOD.
7. THE OWNER OR DESIGNATED CONTRACTOR SHALL OBTAIN A DUST CONTROL PERMIT FROM THE YAVAPAI COUNTY AIR QUALITY DEPARTMENT. MEASURES SHALL BE PERFORMED AS REQUIRED BY THE PERMIT TO PREVENT EXCESS DUST AS INCORPORATED INTO THIS STORMWATER POLLUTION PREVENTION PLAN (SWPPP).
8. THE OWNER OR DESIGNATED CONTRACTOR SHALL AMEND THIS PLAN AS RAINFALL EVENTS, DESIGN CHANGES AND CONSTRUCTION METHODS DICTATE. ALL MODIFICATIONS TO THIS PLAN SHALL BE SUBMITTED TO THE CITY OF COTTONWOOD ENGINEERING DEPARTMENT FOR REVIEW AND ACCEPTANCE PRIOR TO IMPLEMENTATION.
9. THE IMPLEMENTATION OF THESE PLANS, AND THE CONSTRUCTION, MAINTENANCE, REPLACEMENT, AND UPGRADES OF THESE FACILITIES IS THE RESPONSIBILITY OF THE OWNER OR DESIGNATED CONTRACTOR UNTIL ALL CONSTRUCTION HAS BEEN APPROVED AND A NOTICE OF TERMINATION (NOT) HAS BEEN SUBMITTED TO THE ARIZONA DEPARTMENT OF ENVIRONMENTAL QUALITY (ADEQ) AND THE CITY OF COTTONWOOD.
10. THE FACILITIES SHOWN ON THIS PLAN SHALL BE CONSTRUCTED IN CONJUNCTION WITH ALL CLEARING AND GRADING ACTIVITIES IN SUCH A MANNER AS TO ENSURE THAT SEDIMENT-LADEN WATER DOES NOT LEAVE THE PROJECT SITE, ENTER INTO THE DRAINAGE SYSTEM, OR VIOLATE APPLICABLE WATER QUALITY STANDARDS. ADDITIONALLY, THE FACILITIES SHALL BE INSTALLED AND OPERATIONAL PRIOR TO ANY GRADING OR LAND CLEARING ACTIVITIES.
11. WHEN POSSIBLE, MAINTAIN ANY NATURALLY OCCURRING VEGETATION AS A SILT CONTROL BEST MANAGEMENT PRACTICE (BMP).
12. THE CONTRACTOR TO WHOM THE 'AT-RISK'/FINAL GRADING & DRAINAGE PERMIT WILL BE ISSUED SHALL HAVE THE APPROVED STORMWATER POLLUTION PREVENTION PLAN (SWPPP) ISSUED IN THEIR NAME.
13. THE NOTICE OF INTENT (NOI), THE APPROVED STORMWATER POLLUTION PREVENTION PLAN (SWPPP), AND THE YAVAPAI COUNTY AIR QUALITY DEPARTMENT DUST CONTROL PERMIT SHALL BE PROVIDED TO THE CITY OF SURPRISE BEFORE THE GRADING & DRAINAGE PERMIT WILL BE ISSUED.
14. THE OWNER OR DESIGNATED CONTRACTOR OF THE PROJECT SHALL ALSO MAINTAIN RECORDS WITH THE FOLLOWING INFORMATION:
    A) THE DATES WHEN MAJOR GRADING ACTIVITIES OCCUR IN A PARTICULAR AREA.
    B) THE DATES WHEN CONSTRUCTION ACTIVITIES CEASE IN A PARTICULAR AREA (TEMPORARILY OR PERMANENTLY).
    C) THE DATES WHEN AN AREA IS STABILIZED (TEMPORARILY OR PERMANENTLY).
    D) THE DATES OF ANY MAINTENANCE, REPLACEMENT, OR REMOVAL OF REQUIRED BMP'S HAS OCCURRED.
15. ONCE THE CONSTRUCTION ACTIVITIES HAVE BEEN COMPLETED AND THE SITE HAS MET THE FINAL STABILIZATION REQUIREMENTS OF THE PERMIT, THE AUTHORIZED SITE REPRESENTATIVE SHALL FILE A NOTICE OF TERMINATION (NOT) WITH THE ARIZONA DEPARTMENT OF ENVIRONMENTAL QUALITY (ADEQ) AND PROVIDE A COPY TO THE CITY OF COTTONWOOD.
16. THE PERMITTEE SHALL MAINTAIN ALL RECORDS ON FILE, INCLUDING THE NOTICE OF INTENT (NOI), THE STORMWATER POLLUTION PREVENTION PLAN (SWPPP), THE NOTICE OF TERMINATION (NOT), AND ANY AND ALL INSPECTION REPORTS FOR A MINIMUM OF THREE (3) YEARS FROM THE FILING DATE OF THE NOTICE OF TERMINATION (NOT).
17. THE OUTLETS OF ALL SEDIMENT BASINS, TRAPS, AND LOCATIONS OF ARTIFICIALLY CONCENTRATED FLOW SHALL BE PROVIDED WITH OUTLET PROTECTION TO PREVENT EROSION AND SCOUR.
18. THOSE RESPONSIBLE FOR SWPPP PREPARATION, IMPLEMENTATION AND PERMIT COMPLIANCE SHALL BE PROPERLY TRAINED, AND SHALL ATTEND THE PRE-CONSTRUCTION MEETING.
19. A CONCRETE WASHOUT SHALL BE INSTALLED FOR ALL PROJECTS THAT PROPOSE CONCRETE TO BE MIXED ON SITE OR BE DELIVERED FROM A BATCH PLANT. THE CONCRETE WASHOUT SHALL BE LOCATED A MINIMUM OF FIFTY (50) FEET FROM ANY DRAINAGE INFRASTRUCTURE OR NATURAL DRAINAGE FEATURES OR WATER BODIES AND INCORPORATE AN IMPERMEABLE LINER (6.0 MIL MINIMUM THICKNESS) TO CONTAIN THE REQUIRED VOLUME. ALL DRIED CONCRETE WASTE SHALL BE BROKEN INTO MANAGEABLE PIECES AND DISPOSED OF OFF-SITE AT AN APPROVED DISPOSAL FACILITY.
20. THE CONTRACTOR SHALL HAVE EMERGENCY MATERIALS AND EQUIPMENT ON-SITE FOR UNFORESEEN SITUATIONS, SUCH AS DAMAGE TO UNDERGROUND WATER AND SEWER UTILITIES WHEREBY FLOWS MAY GENERATE EROSION AND SEDIMENT POLLUTION.
21. SEDIMENT AND EROSION CONTROLS MAY BE REMOVED ONLY WHEN CONTRIBUTORY UPSTREAM AREAS BECOME STABILIZED OR ARE MANAGED UPSTREAM AND AS LONG AS SEDIMENT LADEN RUNOFF WILL NOT DISCHARGE FROM THE SITE.
22. THIS PLAN SHALL BE IN EFFECT UNTIL ALL DISTURBED AREAS ARE PERMANENTLY STABILIZED, TRANSFERRED TO NEW OWNERSHIP, OR DEVELOPED UNDER FUTURE PLANS WITH A NEW NOTICE OF INTENT (NOI), SWPPP, AND PERMIT.

CITY OF COTTONWOOD STANDARD DETAIL	STORMWATER POLLUTION PREVENTION NOTES	CITY ENGINEER	REVISED	DETAIL NO.
			08/18	1107

1. THE OWNER OR DESIGNATED CONTRACTOR SHALL PERFORM, AT A MINIMUM, A VISUAL INSPECTION OF THE PROJECT SITE ONCE EVERY SEVEN (7) DAYS AND WITHIN TWENTY-FOUR (24) HOURS OF A RAINFALL EVENT GREATER THAN OR EQUAL TO ONE HALF ($\frac{1}{2}$) INCH OR MORE. THE OWNER OR DESIGNATED CONTRACTOR SHALL PREPARE A REPORT DOCUMENTING THE FINDINGS OF THE STORM WATER POLLUTION PREVENTION PLAN (SWPPP) CONTROLS AND NOTE ANY EROSION PROBLEM AREAS. THE REPORT IS TO BE SUBMITTED TO THE PUBLIC WORKS DEPARTMENT CONSTRUCTION INSPECTOR FOR REVIEW AND APPROVAL. FACILITIES SHALL BE MAINTAINED AS NECESSARY TO ENSURE THEIR CONTINUED FUNCTIONING. IN ADDITION, ALL TEMPORARY SILTATION CONTROLS SHALL BE MAINTAINED IN A SATISFACTORY CONDITION UNTIL SUCH TIME THAT CONSTRUCTION IS COMPLETED, PERMANENT DRAINAGE FACILITIES ARE OPERATIONAL, AND THE POTENTIAL FOR EROSION HAS BEEN ELIMINATED AS DETERMINED BY THE PUBLIC WORKS DIRECTOR OR DESIGNEE.
2. THE INSPECTION BY THE OWNER OR DESIGNATED CONTRACTOR SHALL INCLUDE, AT A MINIMUM, THE FOLLOWING:
   - A) CHECK DISTURBED AREAS AND ANY MATERIAL STORAGE AREAS (IF APPLICABLE TO THE STORMWATER POLLUTION PREVENTION PLAN (SWPPP) FOR EVIDENCE OF OR THE POTENTIAL FOR DISCHARGE OF POLLUTANTS.
   - B) ENSURE THAT SEDIMENT AND EROSION CONTROL MEASURES ARE FUNCTIONING AND OPERATING CORRECTLY.
   - C) AT ACCESSIBLE DISCHARGE POINTS, DETERMINE WHETHER BMP'S ARE EFFECTIVE IN PREVENTING SIGNIFICANT IMPACTS TO RECEIVING WATERS. WHERE DISCHARGE POINTS ARE INACCESSIBLE OR UNSAFE TO INSPECT, INSPECT DOWNSTREAM AREAS FOR EVIDENCE OF DISCHARGE.
   - D) DOCUMENT SEDIMENT TRACK-OUT AT ALL INGRESS AND EGRESS LOCATIONS FROM THE PROJECT SITE.
   - E) DOCUMENT ANY REVISIONS TO BMP'S ON THE STORM WATER POLLUTION PREVENTION PLAN (SWPPP) WITHIN SEVEN (7) DAYS OF INSPECTION AND CORRECTION.
   - F) DOCUMENT ANY INCIDENTS OF NON-COMPLIANCE OR CERTIFY THAT THE SITE IS IN COMPLIANCE WITH THE STORM WATER POLLUTION PREVENTION PLAN (SWPPP).
   - G) DOCUMENT ANY ACTIVITY THAT CREATES A NON-STORM WATER DISCHARGE, INCLUDING DATE AND TIME, LOCATION, REASON FOR DISCHARGE, AMOUNT OF THE DISCHARGE, BMP MEASURES USED TO MEDIATE THE DISCHARGE, AND BMP'S USED TO PREVENT FURTHER NON-STORM WATER DISCHARGES FROM THE ACTIVITY.

CITY OF COTTONWOOD STANDARD DETAIL	SWPPP INSPECTION NOTES	CITY ENGINEER	REVISED	DETAIL NO.
			08/18	1108

1. PRIOR TO OR IMMEDIATELY FOLLOWING CLEARING & GRUBBING, AND AS PART OF THE INITIAL ROUGH GRADING, ALL RETENTION BASINS SHALL BE CUT TO GRADE. THE BASINS SHALL CONSTITUTE THE REQUIRED SEDIMENT BASINS. GRADES SHALL BE CUT (BERMING OR STRAW BALES MAY ALSO BE PROVIDED) PER THIS PLAN TO ASSURE THAT RUNOFF IS CONVEYED TO THE RETENTION BASINS.
2. A STABILIZED CONSTRUCTION ENTRANCE CONSISTING OF A MINIMUM OF SIX (6) INCHES OF COARSE AGGREGATE SHALL BE INSTALLED AS SHOWN. ALL CONSTRUCTION TRAFFIC SHALL ENTER THROUGH THIS ENTRANCE. THE STABILIZED CONSTRUCTION ENTRANCE SHALL BE RE-GRADED OR REPLACED WHEN IT BECOMES SATURATED OR MATTED WITH SITE SOILS OR SEDIMENT. THE PAVED STREET ADJACENT TO THE CONSTRUCTION ENTRANCE SHALL BE SWEPT ON A REGULAR BASIS TO REMOVE ANY ACCUMULATED MUD OR DIRT TRACKED FROM THE SITE.
3. ANY DISTURBED AREAS WHERE CONSTRUCTION HAS PERMANENTLY OR TEMPORARILY CEASED SHALL BE STABILIZED TO PREVENT EROSION. AN ACCEPTABLE STABILIZATION METHOD IS HYDROSEEDING AND WATERING. AREAS WHICH WILL BE DISTURBED WITHIN TWENTY-ONE (21) DAYS OF CEASING CONSTRUCTION MAY BE STABILIZED BY WATERING.
4. THE CATCH BASIN LOW POINTS SHALL ALSO ACT AS THE REQUIRED SEDIMENT BASINS FOR THE PROJECT. THEY SHALL BE INSPECTED ON A MONTHLY BASIS AND AFTER EVERY RAIN EVENT. SEDIMENT SHALL BE REMOVED FROM THE BASINS AS NECESSARY TO MAINTAIN A MINIMUM OF 75% OF REQUIRED CAPACITY OF THE BASIN DURING CONSTRUCTION AND 100% OF REQUIRED CAPACITY POST-CONSTRUCTION.
5. THE SWPPP IS USED TO MAINTAIN ALL ON-SITE STORM WATER POLLUTANTS AND SEDIMENT. HOWEVER, IF ANY OFF-SITE ACCUMULATIONS OF SEDIMENT OR POLLUTANTS OCCUR, IMMEDIATE ACTION SHALL BE REQUIRED TO REMOVE THE ACCUMULATION

CITY OF COTTONWOOD STANDARD DETAIL	EROSION & SEDIMENT CONTROL NOTES	CITY ENGINEER	REVISED	DETAIL NO.
			08/18	1109

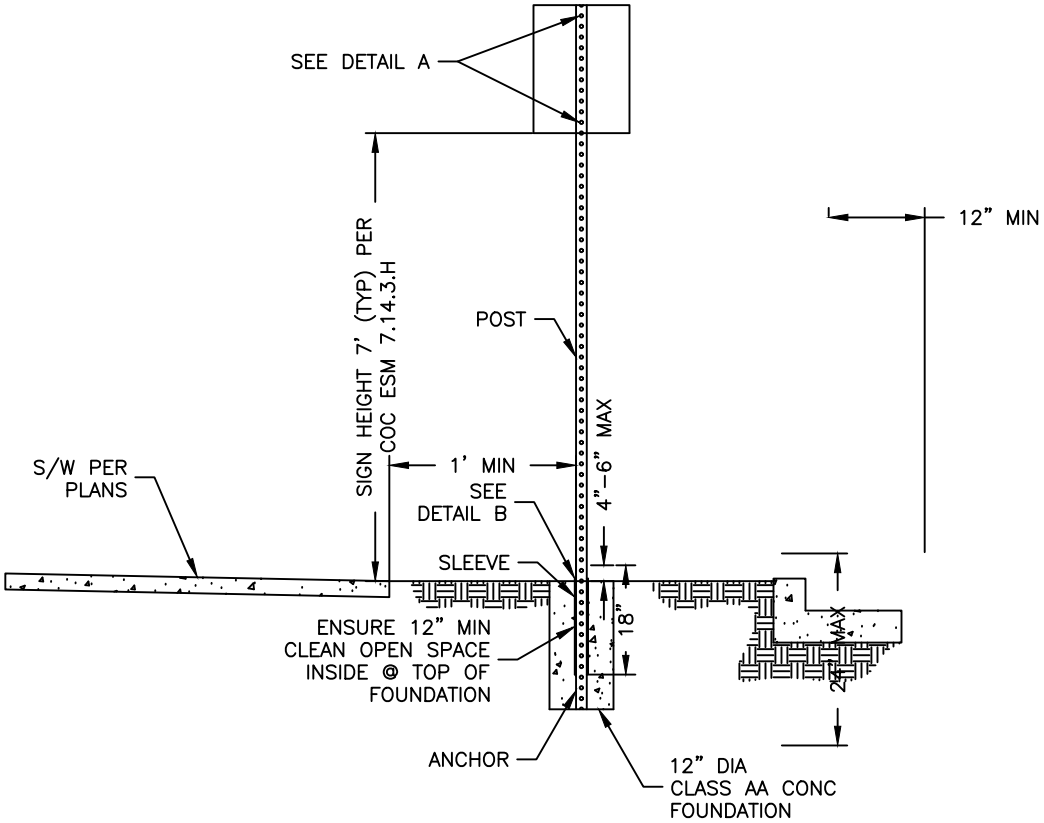

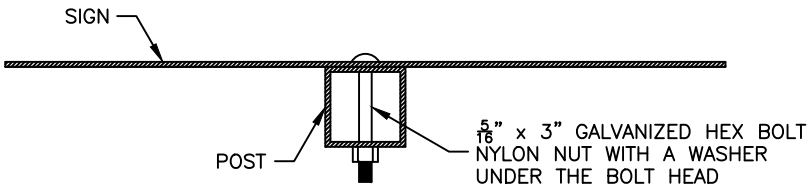

DETAIL A
SIGN MOUNTING

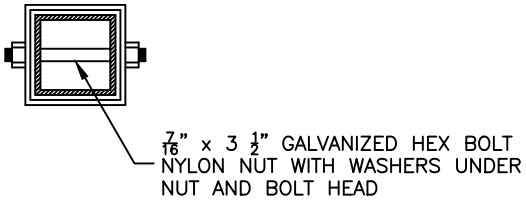

DETAIL B
ANCHOR ASSEMBLY

LEGEND

1. POST – 2" x 2" SQUARE PERFORATED 12 GAUGE GALVANIZED STEEL TUBING
2. SLEEVE – 2 1/2" x 2 1/2" x 18", SQUARE PERFORATED 12 GAUGE GALVANIZED STEEL TUBING
3. ANCHOR – 2 1/4" x 2 1/4" x 24", SQUARE PERFORATED 12 GAUGE GALVANIZED STEEL TUBING

CITY OF COTTONWOOD STANDARD DETAIL	SIGN POST INSTALLATION	CITY ENGINEER	REVISED	DETAIL NO.
			08/18	1131

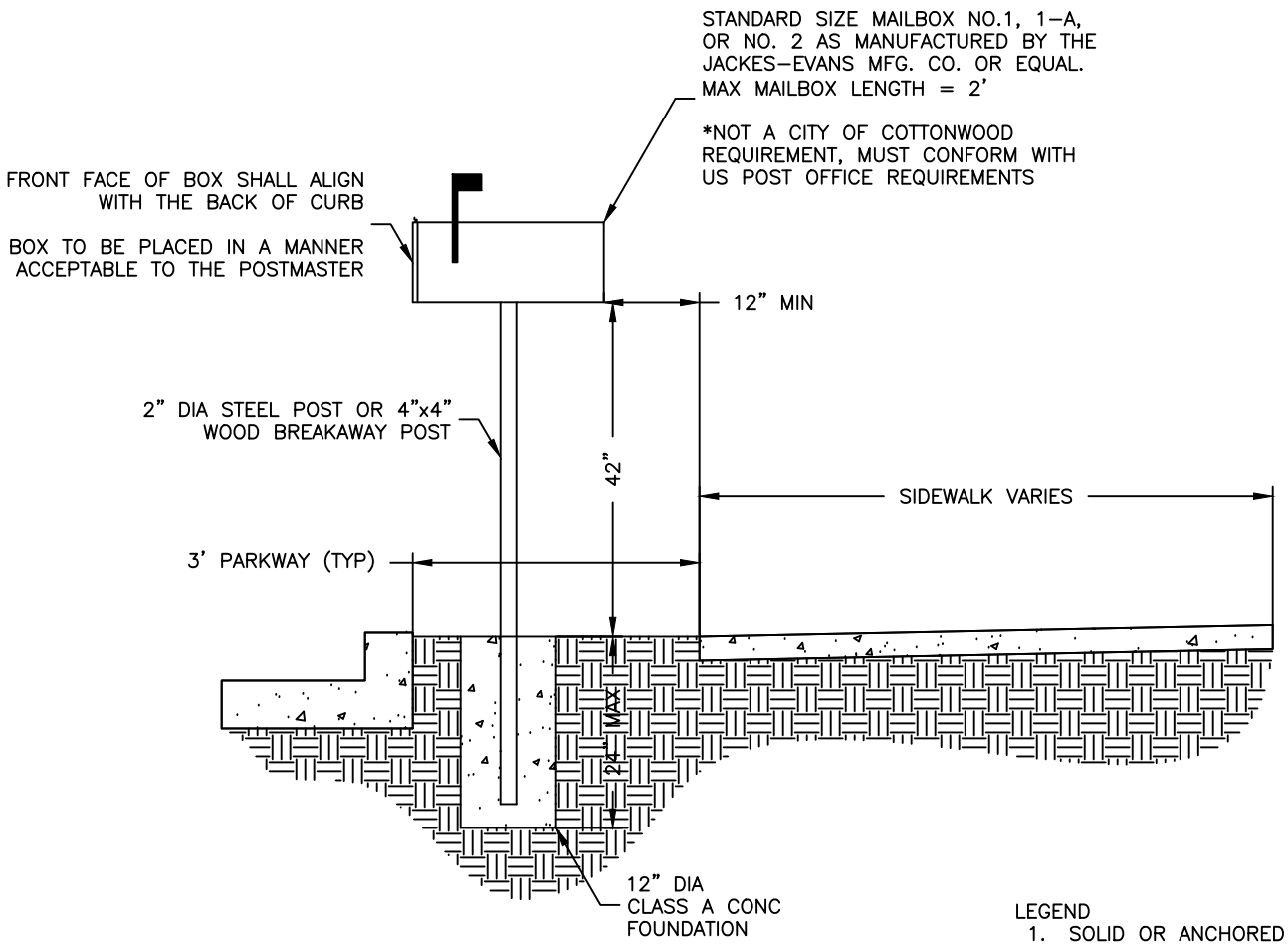

LEGEND

1. SOLID OR ANCHORED STRUCTURES IN THE RIGHT OF WAY SHALL BE OF BREAKAWAY CONSTRUCTION TO LIMIT DAMAGE & INJURIES.
2. ANY DEVIATION FROM THIS DETAIL OR STANDARD MAILBOX MUST BE APPROVED BY THE CITY ENGINEER.

CITY OF COTTONWOOD STANDARD DETAIL	MAILBOX WITH PARKWAY	CITY ENGINEER	REVISED	DETAIL NO.
			08/18	1138

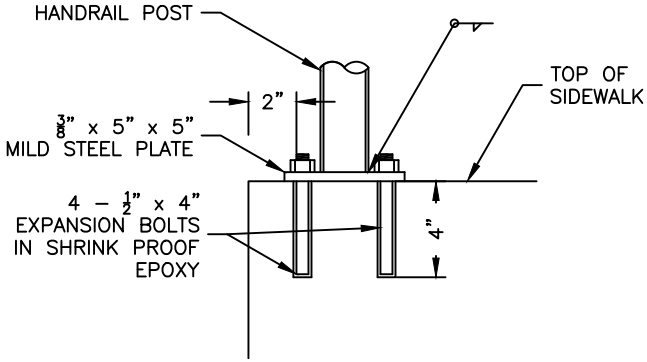

EXPANSION BOLT DETAIL
@ BACK OF SIDEWALK
NO SCALE

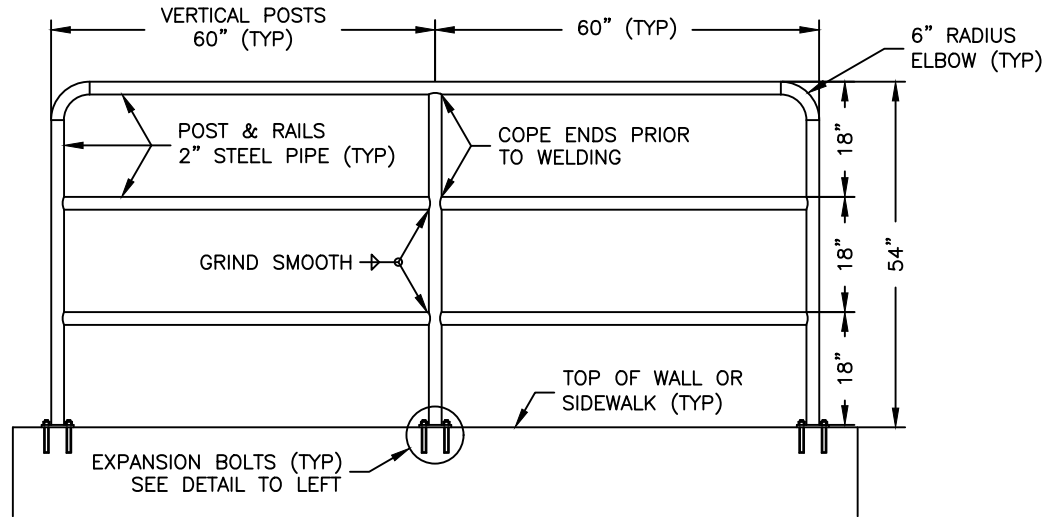

HANDRAIL DETAIL @ TOP OF WALL OR BACK OF SIDEWALK
NO SCALE

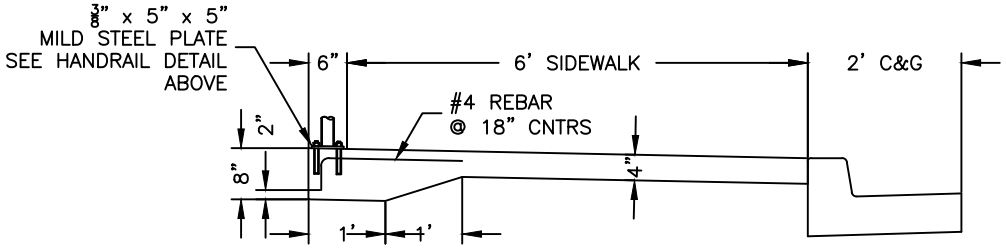

SIDEWALK DETAIL
NO SCALE

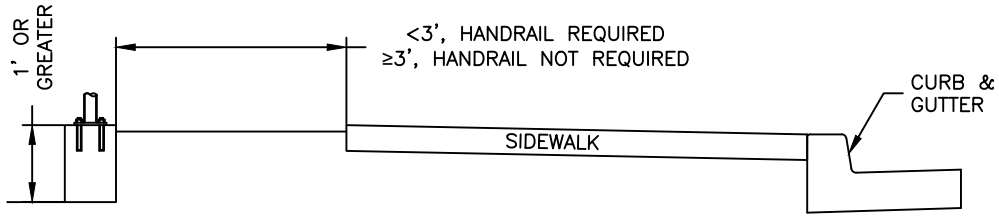

NOTE:
HANDRAIL & THICKENED EDGE SIDEWALK IS REQUIRED WHEREVER THERE IS A VERTICAL DROPOFF OF 1/ OR GREATER OR A SLOPE STEEPER THAN 2:1 WITHIN 3' OF THE BACK OF SIDEWALK.

HANDRAIL NOTES:

1. ALL WELDING SHALL BE IN ACCORDANCE WITH AMERICAN WELDING SOCIETY (AWS) D1.1 USING E70XX ELECTRODES.
2. POSTS SHALL BE INSTALLED VERTICALLY & EVENLY SPACED. RAILINGS SHALL BE INSTALLED SOT THAT THEY ARE PARALLEL TO THE TOP OF THE SIDEWALK OR WALL.
3. STEEL PIPE SHALL BE COATED WITH AN ULTRAVIOLETLY CURED CROSS LINK ACRYLIC COATING. COVERAGE SHALL BE 100%. THIS COATING SHALL SERVE AS A PRIMER FOR THE FINAL COAT APPLIED IN THE FIELD. FINAL COAT SHALL BE SHERWIN WILLIAMS SW–6454 "SHAMROCK".
4. ALL PIPE SHALL BE 14 GAUGE MEETING THE REQUIREMENTS OF ASTM 135 GRADE 48 (Fy = 48 ksi).
5. TOP RAIL ON END POSTS SHALL HAVE A 6" OUTSIDE RADIUS.
6. ADHESIVE STRIP REFLECTIVE BANDS (3 EA/POST) SHALL BE PLACED CENTERED BETWEEN HORIZONTAL POSTS ON EACH VERTICAL END POST OF HANDRAILS.
7. ADOT HANDRAIL DETAIL B–22.40 & 41 MAY BE SUBSTITUTED ONLY WITH APPROVAL OF THE CITY ENGINEER.
8. SQUARE TUBING 2" x 2" x 0.188" MAY BE SUBSTITUTED ONLY WITH APPROVAL OF THE CITY ENGINEER.

CITY OF COTTONWOOD STANDARD DETAIL	HANDRAIL INSTALLATION	CITY ENGINEER	REVISED	DETAIL NO.
			08/18	1145

PAVEMENT REPAIR

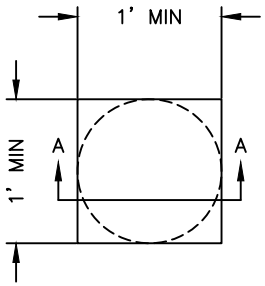

NOTES:
1. DIMENSIONS ARE NOMINAL.
2. EDGES SHALL BE CUR TO A NEAT VERTICAL FACE.
3. PLACE CLSM BACKFILL IN ACCORDANCE WITH MAG SPEC SEC 604.
4. PLACE ASPHALT CONCRETE IN LIFTS (2" MAX THICKNESS PER LIFT).

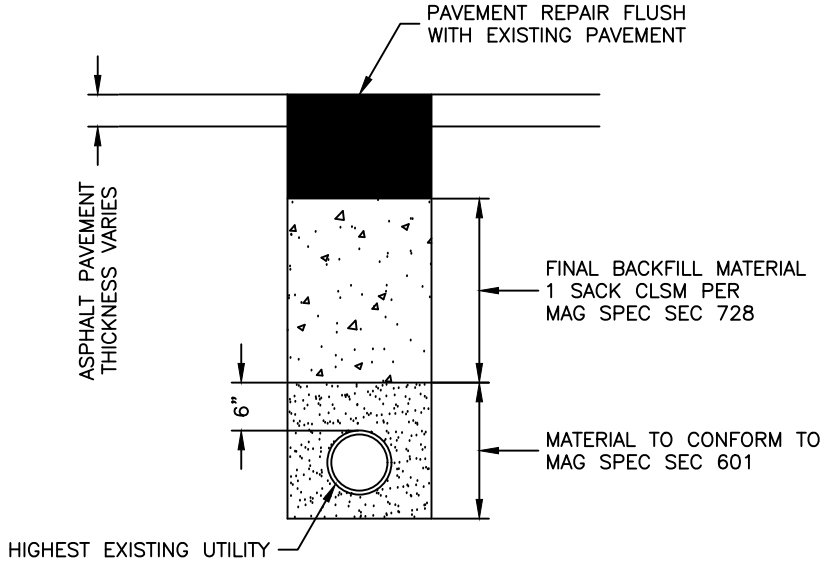

SECTION VIEW
NO SCALE

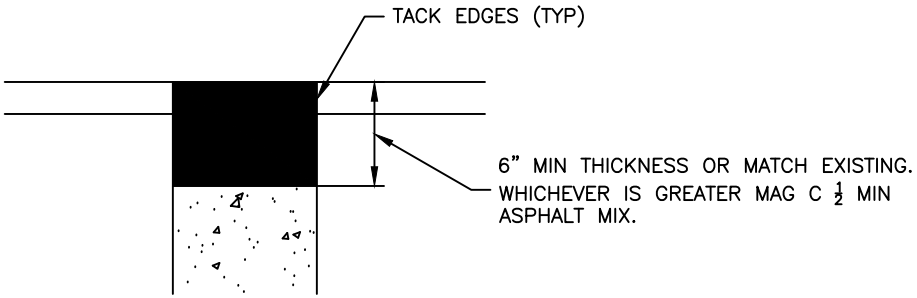

SECTION A–A
NO SCALE

CITY OF COTTONWOOD STANDARD DETAIL	UTILITY POTHOLE REPAIR	CITY ENGINEER	REVISED	DETAIL NO.
			08/18	1212

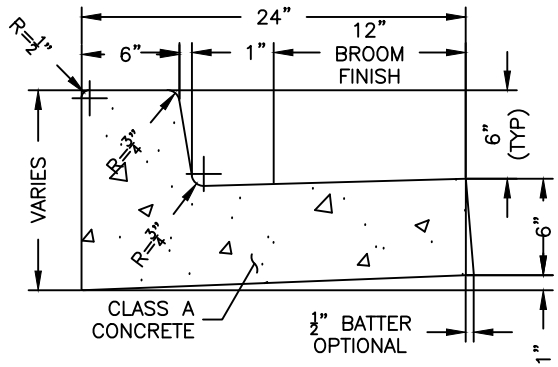

VERTICAL CURB & GUTTER (TYPE A)
NO SCALE

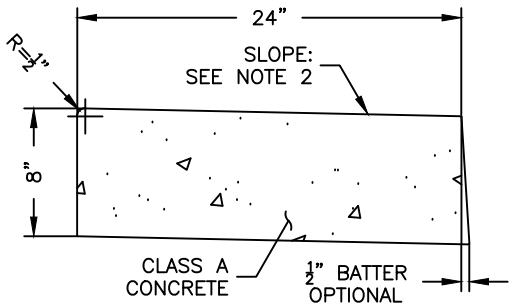

RIBBON CURB (TYPE B)
NO SCALE

NOTES:
1. CONSTRUCT CURB & INSTALL ½" MASTIC EXPANSION JOINTS, ASTM D-1751 AND MAG SPEC SEC 340.
2. RIBBON CURB MAY SLOPE TOWARDS PAVEMENT OR PARKWAY AS INDICATED ON PLANS.

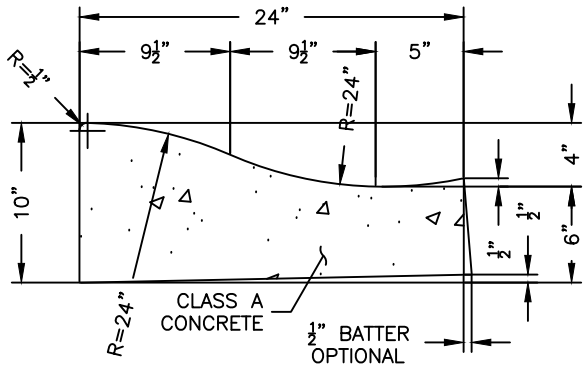

ROLL CURB & GUTTER (TYPE C)
NO SCALE

NOTES:
1. ALL EXPOSED SURFACES TO BE TROWEL FINISHED EXCEPT AS NOTED. SEE MAG SPEC SECTIONS 340, 505 & 725.
2. HEIGHT OF TYPE 'A' CURB SHALL BE 6" UNLESS NOTED OTHERWISE.
3. CONTRACTION JOINT SPACING SHALL BE A MAXIMUM OF 10 FEET.
4. EXPANSION JOINTS SHALL BE CONSTRUCTED PER MAG SPEC SEC 340, 50' MAX AT PC, DRIVEWAYS, ALLEYS & STRUCTURES.
5. 4" MIN ABC SHALL EXTEND TO BACK OF CURB BELOW ALL CURB & GUTTER.
6. WHEN THE ADJACENT PAVEMENT SECTION SLOPES AWAY FROM THE GUTTER, THE SLOPE OF THE GUTTER PAN SHALL MATCH THE PAVEMENT CROSS SLOPE.
7. ¼" ROUND FINISH SHALL BE REQUIRED AT THE LIP OF GUTTER, TYP ALL DETAILS.
8. FINAL PAVEMENT SURFACE SHALL BE ¼" ABOVE GUTTERS EXCEPT TYPE 'D' AND WHERE THE GUTTER SLOPES TOWARD THE PAVEMENT.

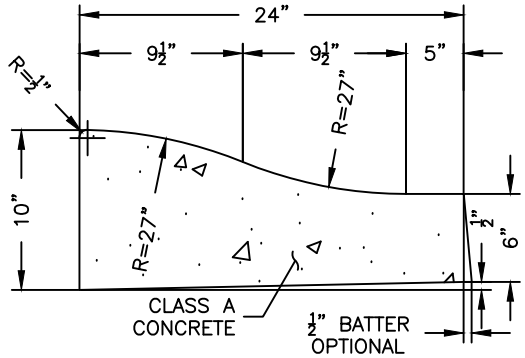

(TYPE D)
NO SCALE
SPECIAL SECTION USE FOR HIGH SIDE CURB WITH SHEET DRAINAGE REVERSE FLOW ACROSS STREET

CITY OF COTTONWOOD STANDARD DETAIL	CURB & GUTTER TYPES A, B, C & D	CITY ENGINEER	REVISED	DETAIL NO.
			08/18	1220-1

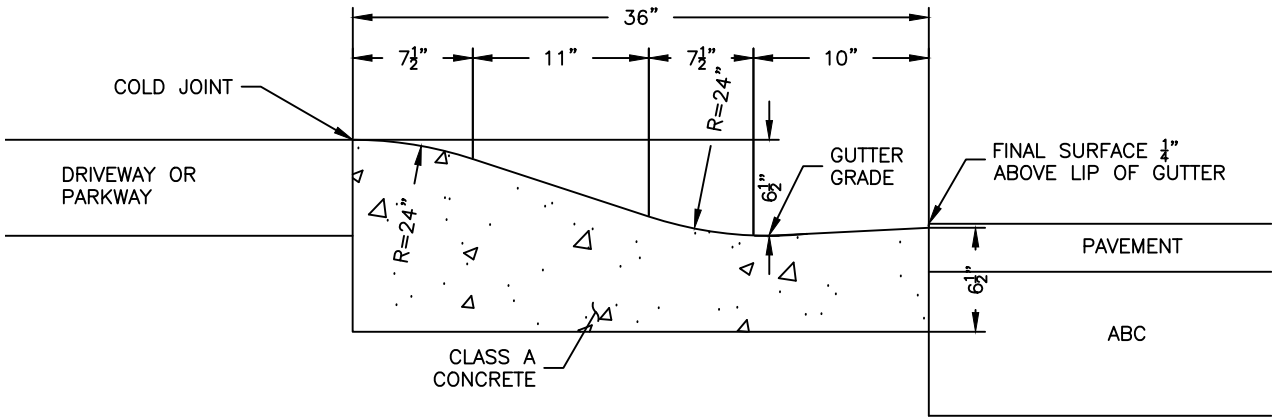

3' ROLL CURB (6" HIGH)
NO SCALE

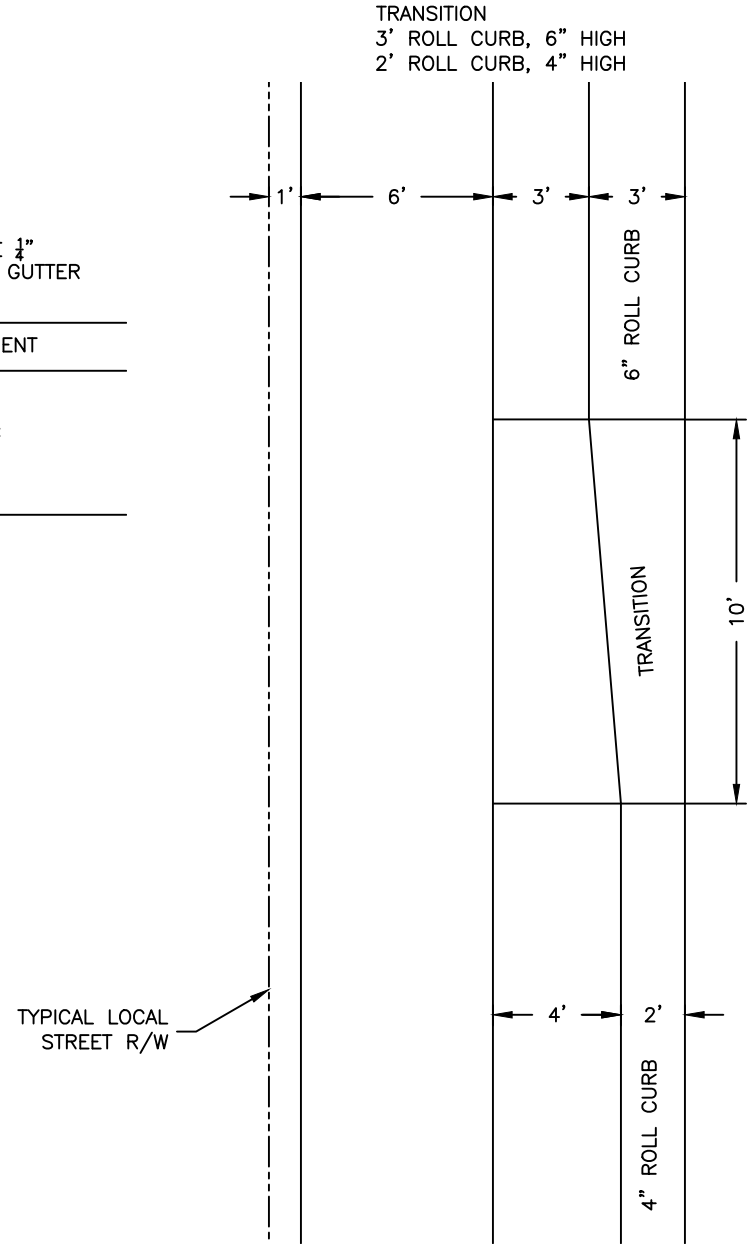

PLAN VIEW
NO SCALE

NOTES:
1. ALL WORK AND MATERIALS SHALL CONFORM TO MAG SPEC SECTIONS 340, 505 & 725 BROOM FINISH EXPOSED SURFACE.
2. CONTRACTION JOINT SPACING SHALL BE A MAXIMUM OF 10 FEET.
3. EXPANSION JOINTS SHALL BE CONSTRUCTED AS PER MAG SPEC SEC 340.

CITY OF COTTONWOOD STANDARD DETAIL	3' ROLL CURB & ROLL CURB TRANSITION	CITY ENGINEER	REVISED	DETAIL NO.
			08/18	1220-2

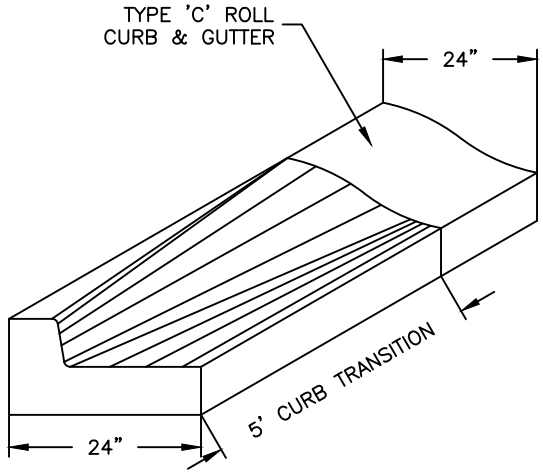

CURB TRANSITION TYPE 'A' TO TYPE 'C'
NO SCALE

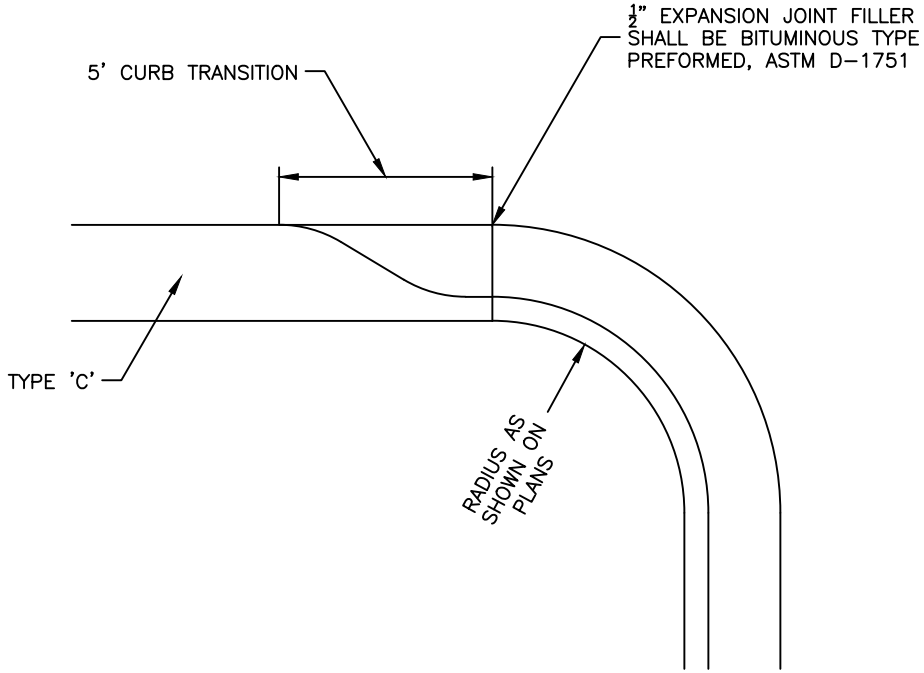

CURB & GUTTER TRANSITION
NO SCALE

NOTES:

1. TRANSITIONS WILL BE PAID FOR AS THE PREDOMINANT TYPE OF CURB AND BUTTER BEING TRANSITIONED. WHEN TYPE "A" CURB AND GUTTER ARE USED AT RETURNS AND TYPE 'C' CURB AND GUTTER IS PREDOMINANTLY USED ELSEWHERE, THE TYPE 'A' TO TYPE 'C' TRANSITIONS SHALL BE MEASURED AND PAID FOR AS TYPE 'C' CURB & GUTTER.
2. WHERE PROPOSED CONSTRUCTION IS TO BE CONNECTED TO EXISTING CURB AND GUTTER, THE TRANSITION SHALL BE INDICATED ON THE PLANS.
3. CLASS 'A' CONCRETE PER MAG SPEC SEC 725.
4. TRANSITION BETWEEN TYPICAL SECTIONS SHALL BE ACCOMPLISHED BY THE USE OF DIRECT STRAIGHT LINE TRANSITIONS OF THE FLOW LINE AND OTHER SURFACE FEATURES.

CITY OF COTTONWOOD STANDARD DETAIL	CURB & GUTTER TRANSITION TYPE 'A' TO TYPE 'C'	CITY ENGINEER	REVISED	DETAIL NO.
			08/18	1221

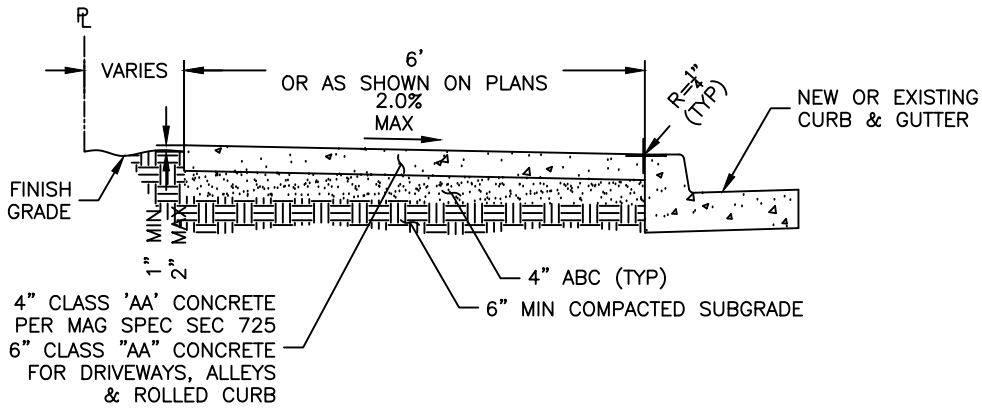

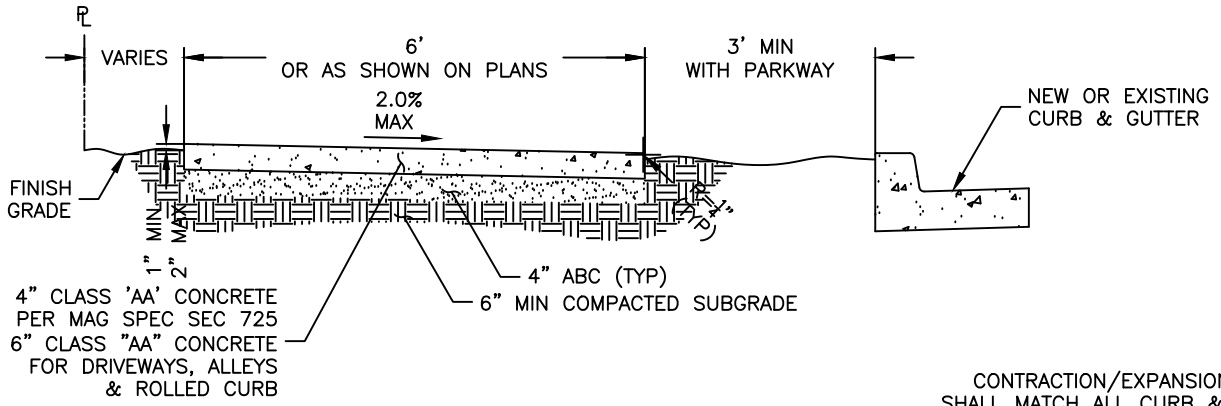

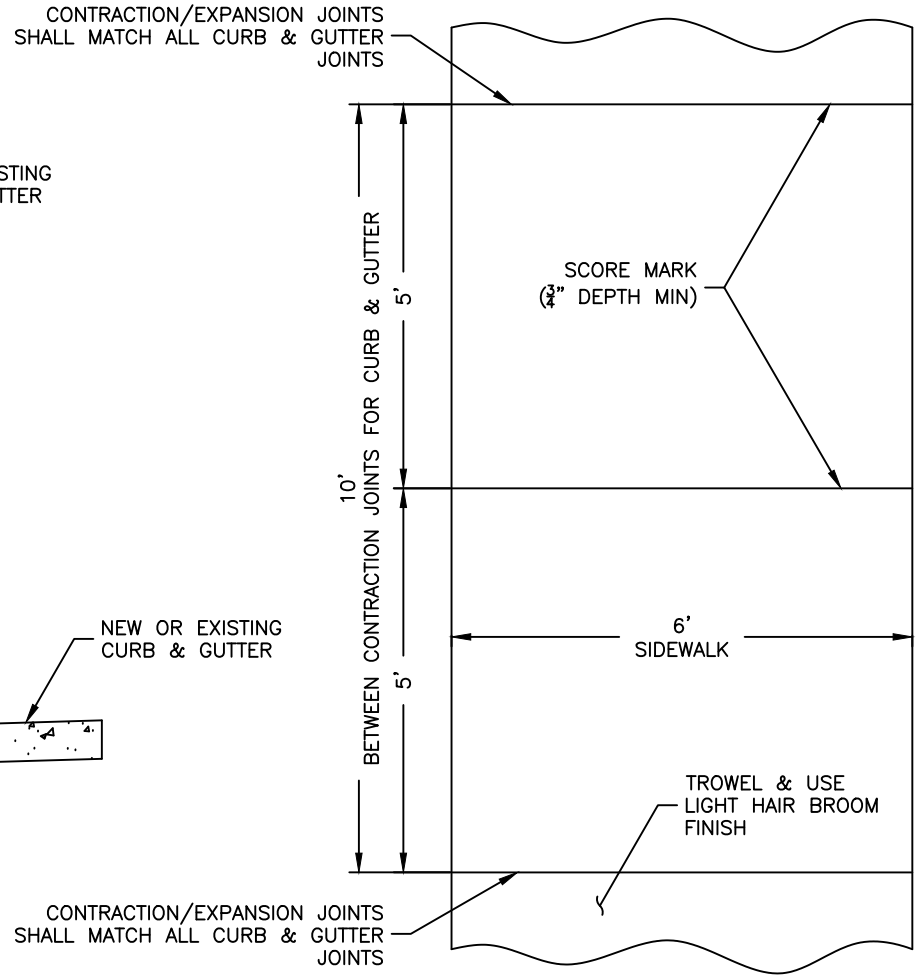

NOTES:

1. SIDEWALK CONSTRUCTION SHALL CONFORM TO MAG SPEC SECTIONS 725 & 340.
2. EXPANSION JOINT FILLER SHALL BE $\frac{1}{2}$" BITUMINOUS TYPE PREFORMED EXPANSION JOINT FILLER, ASTM D-1751.
3. LARGE AGGREGATE, IN CONTRACTION JOINT, SHALL BE SEPARATED TO A DEPT OF 1". FINISH DEPTH SHALL BE A MINIMUM OF $\frac{3}{4}$".
4. EXPANSION JOINTS SHALL HAVE A MAXIMUM SPACING OF 50' PER MAG SPEC SEC 340, AND BE LOCATED AT ALL PC's, DRIVEWAYS, ALLEYS AND STRUCTURES.
5. SUBGRADE TO BE COMPACTED TO 95% OF MAXIMUM PER MAG SPEC SEC 301. MOISTURE TO BE 2% OVER OPTIMUM IN COHESIVE SOILS.
6. SIDEWALKS ADJACENT TO ROLLED CURB & GUTTER (TYPES C & D PER COC STD DTL 1230) SHALL BE A MINIMUM OF 6-INCHES THICK.

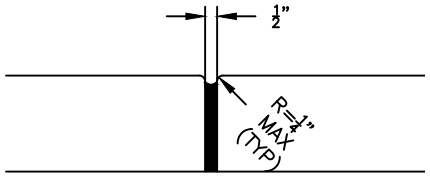

EXPANSION JOINT
NO SCALE

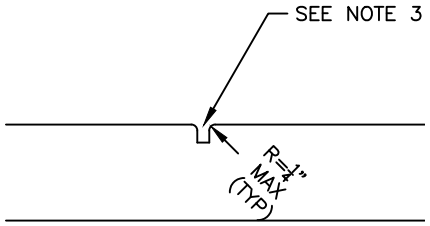

CONTRACTION JOINT
NO SCALE

CITY OF COTTONWOOD STANDARD DETAIL	SIDEWALKS	CITY ENGINEER	REVISED	DETAIL NO.
			04/2020	1230

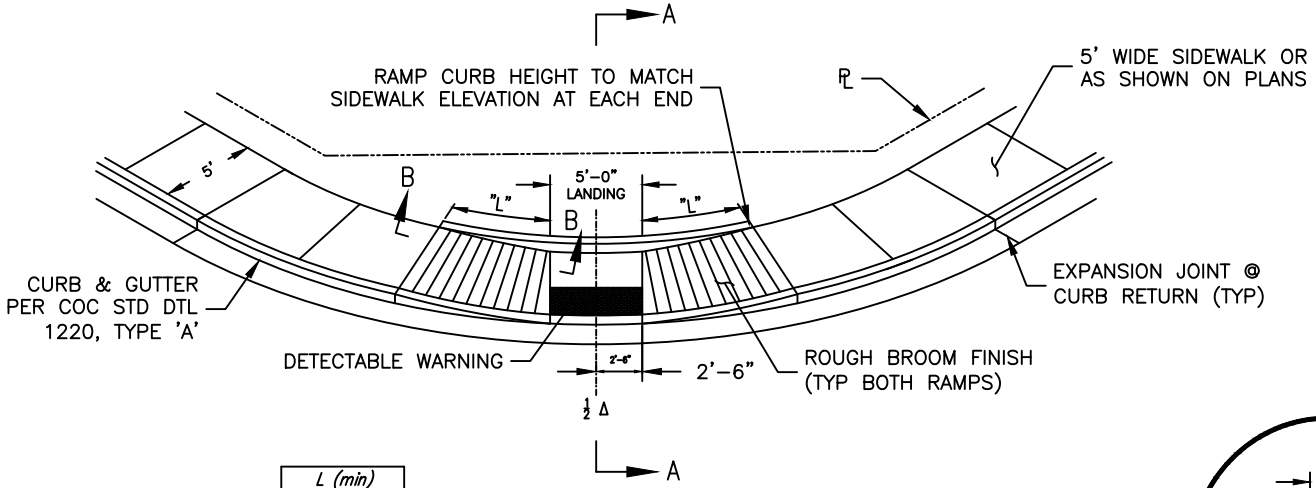

CURB HEIGHT	L (min) $S_G \leq 1\%$	L (min) $S_G \leq 2\%$
4"	5.0'	6.0'
6"	7.0'	8.5'

S_G=MAXIMUM GUTTER SLOPE WITHIN RAMP LIMITS

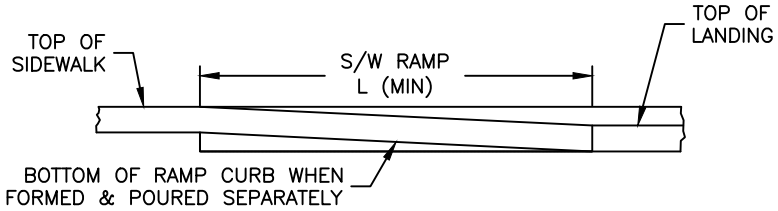

SECTION B–B
NO SCALE

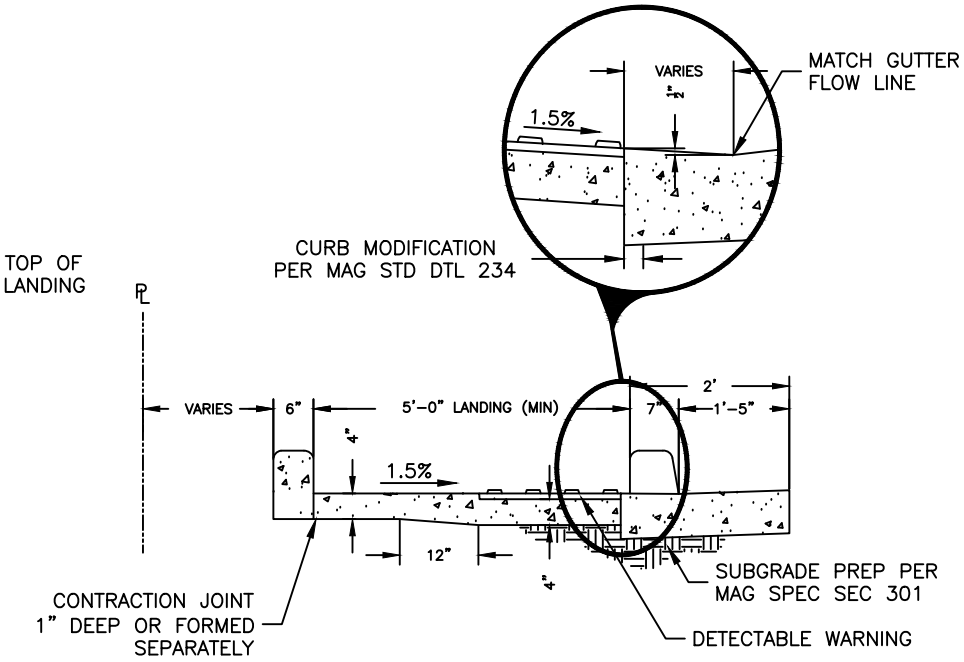

SECTION A–A
NO SCALE

NOTES:

1. CLASS 'B' CONCRETE CONSTRUCTION SHALL CONFORM TO MAG SPEC SECTIONS 725 & 340.
2. DETECTABLE WARNING SHALL COMPLY WITH THE JURISDICTIONAL AGENCY'S REQUIREMENTS.
3. RAMP LONGITUDINAL SLOPE SHALL BE 12:1 OR FLATTER.
4. RAMP CROSS SLOPE SHALL BE 1.5% MAXIMUM.
5. DETAIL IS ADA COMPLIANT FOR CURB AND RADII 20' OF GREATER AND GUTTER SLOPE OF 2.0% OR FLATTER.

CITY OF COTTONWOOD STANDARD DETAIL	CURB RAMPS	CITY ENGINEER	REVISED	DETAIL NO.
			04/2020	1235

NOTES:

1. DEPRESSED CURB SHALL BE PAID FOR AT THE CONTRACT UNIT PRICE FOR THE TYPE OF CURB USED AT THAT LOCATION.
2. CONTRACTION JOINT ON D/W CENTERLINE
3. CONTRACTION JOINT
4. ½" EXPANSION JOINTS SHALL COMPLY WITH MAG SPEC SEC 340.
5. BACK OF CURB – CONSTRUCTION JOINT
6. CLASS 'A' CONCRETE PER MAG SPEC SEC 725.
7. SUBGRADE PREPARATION PER MAG SPEC SEC 301.
8. FLOW LINE OF GUTTER.
9. DEPRESSED CURB
10. SECTION A–A & ELEVATION: D/W SHOWN WITH VERTICAL CURB & GUTTER, ROLL TYPE CURB & GUTTER TREATED SIMILARLY.
11. ROUGH BROOM FINISH FULL WIDTH OF RAMP & WINGS.
12. TROWEL AND USE LIGHT HAIR BROOM FINISH FOR WALKWAY AREA.
13. ELEVATION AT TOP OF DRIVEWAY RAMP SHALL BE EQUAL TO OR HIGHER THAN NORMAL CURB ELEVATION.
14. DRIVEWAY WIDTH SHALL BE APPROVED BY THE CITY ENGINEER PRIOR TO ISSUANCE OF A RIGHT OF WAY PERMIT.

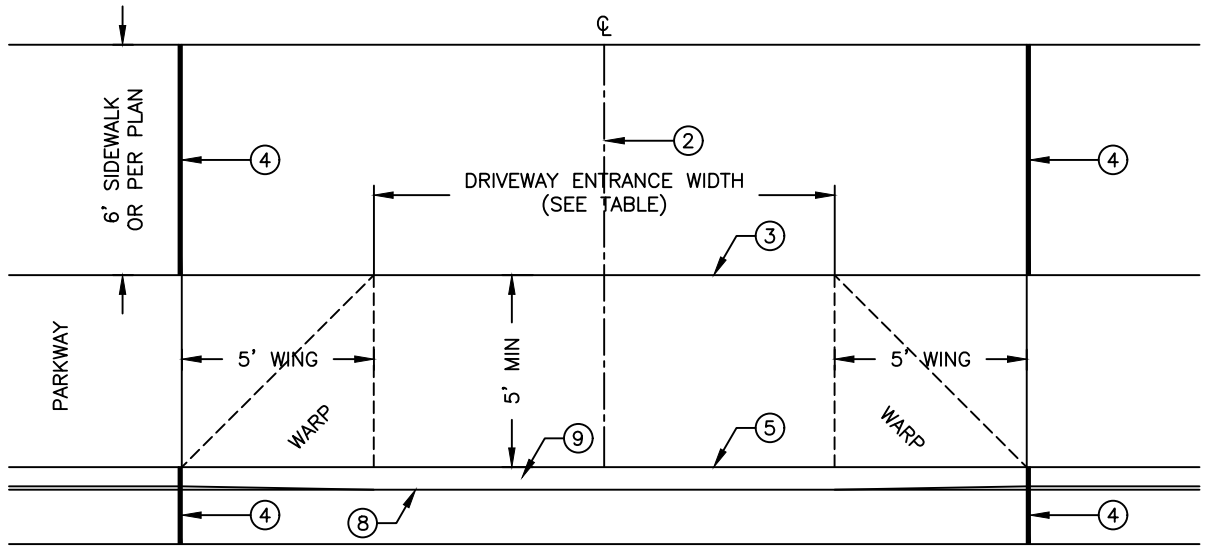

DRIVEWAY WITH DETACHED SIDEWALK
NO SCALE

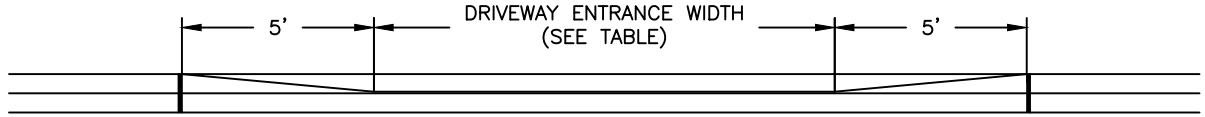

COMMERCIAL & INDUSTRIAL				
DRIVEWAY ENTRANCE WIDTH	MIN	MAX	CLASS	DEPTH 'X'
COMMERCIAL	*16'	40'	A	9"
INDUSTRIAL	*16'	40'	A	9"
*24' MIN FOR TWO WAY TRAFFIC				
RESIDENTIAL				
DRIVEWAY ENTRANCE WIDTH	MIN	MAX	CLASS	DEPTH 'X'
ARTERIAL STREET	16'	30'	A	6"
COLLECTOR STREET	*12'	30'	A	6"
LOCAL STREET	12'	30'	A	6"
*16' DESIRABLE				

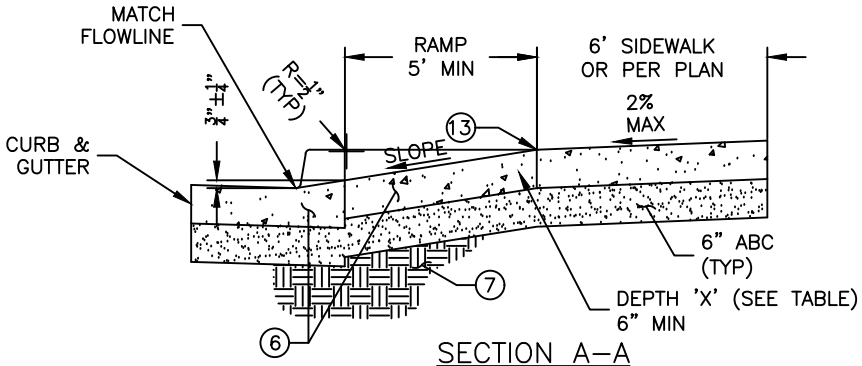

SECTION A–A
NO SCALE

CITY OF COTTONWOOD STANDARD DETAIL	DRIVEWAY ENTRANCE WITH DETACHED SIDEWALKS	CITY ENGINEER	REVISED	DETAIL NO.
			08/18	1250–1

NOTES:

1. DEPRESSED CURB SHALL BE PAID FOR AT THE CONTRACT UNIT PRICE FOR THE TYPE OF CURB USED AT THAT LOCATION.
2. CONTRACTION JOINT ON D/W CENTERLINE
3. CONTRACTION JOINT
4. ½" EXPANSION JOINTS SHALL COMPLY WITH MAG SPEC SEC 340.
5. BACK OF CURB – CONSTRUCTION JOINT
6. CLASS 'A' CONCRETE PER MAG SPEC SEC 725.
7. SUBGRADE PREPARATION PER MAG SPEC SEC 301.
8. FLOW LINE OF GUTTER.
9. DEPRESSED CURB
10. SECTION A–A & ELEVATION: D/W SHOWN WITH VERTICAL CURB & GUTTER, ROLL TYPE CURB & GUTTER TREATED SIMILARLY.
11. ROUGH BROOM FINISH FULL WIDTH OF RAMP & WINGS.
12. TROWEL AND USE LIGHT HAIR BROOM FINISH FOR WALKWAY AREA.
13. ELEVATION AT TOP OF DRIVEWAY RAMP SHALL BE EQUAL TO OR HIGHER THAN NORMAL CURB ELEVATION.
14. DRIVEWAY WIDTH SHALL BE APPROVED BY THE CITY ENGINEER PRIOR TO THE ISSUANCE OF A RIGHT OF WAY PERMIT.

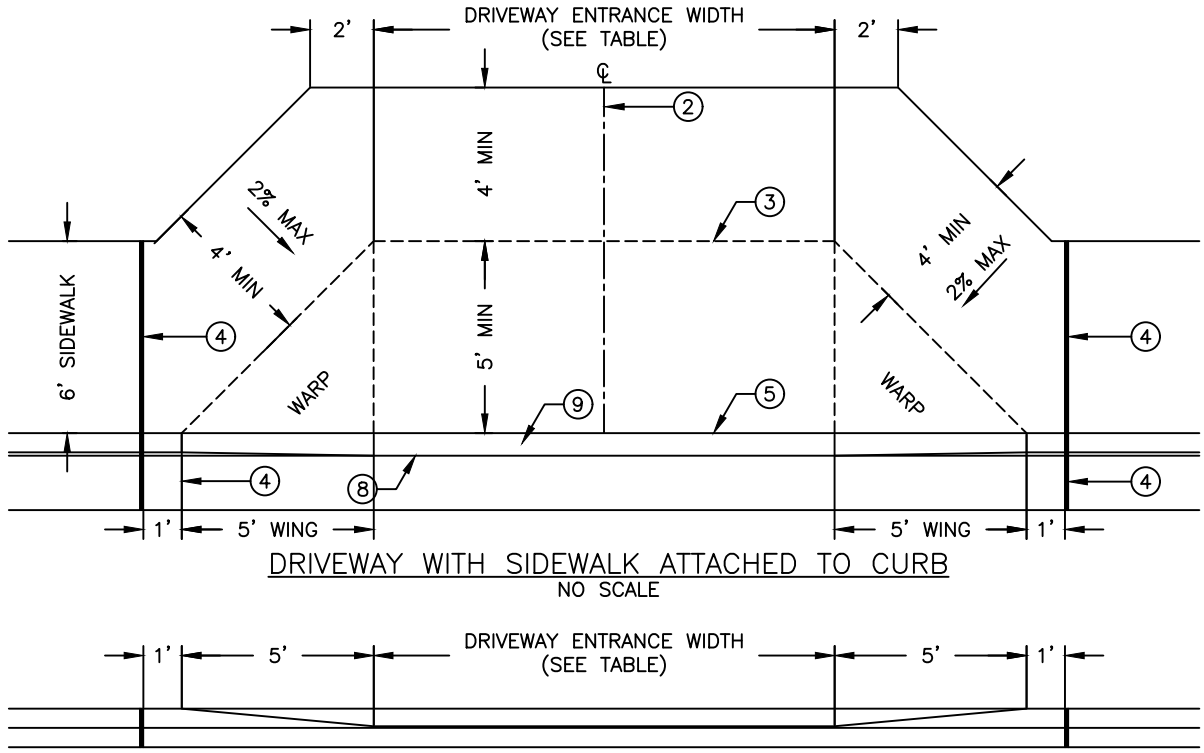

DRIVEWAY WITH SIDEWALK ATTACHED TO CURB
NO SCALE

COMMERCIAL & INDUSTRIAL				
DRIVEWAY ENTRANCE WIDTH	MIN	MAX	CLASS	DEPTH 'X'
COMMERCIAL	*16'	40'	A	9"
INDUSTRIAL	*16'	40'	A	9"
*24' MIN FOR TWO WAY TRAFFIC				
RESIDENTIAL				
DRIVEWAY ENTRANCE WIDTH	MIN	MAX	CLASS	DEPTH 'X'
ARTERIAL STREET	16'	30'	A	6"
COLLECTOR STREET	*12'	30'	A	6"
LOCAL STREET	12'	30'	A	6"
*16' DESIRABLE				

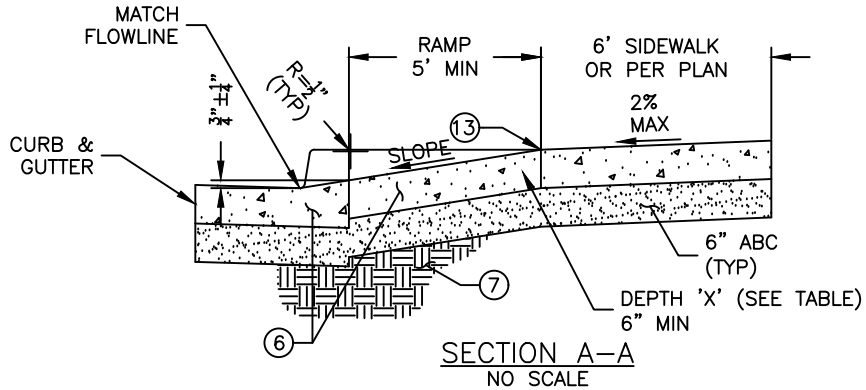

SECTION A–A
NO SCALE

CITY OF COTTONWOOD STANDARD DETAIL	DRIVEWAY ENTRANCE WITH SIDEWALK ATTACHED TO CURB	CITY ENGINEER	REVISED	DETAIL NO.
			08/18	1250–2

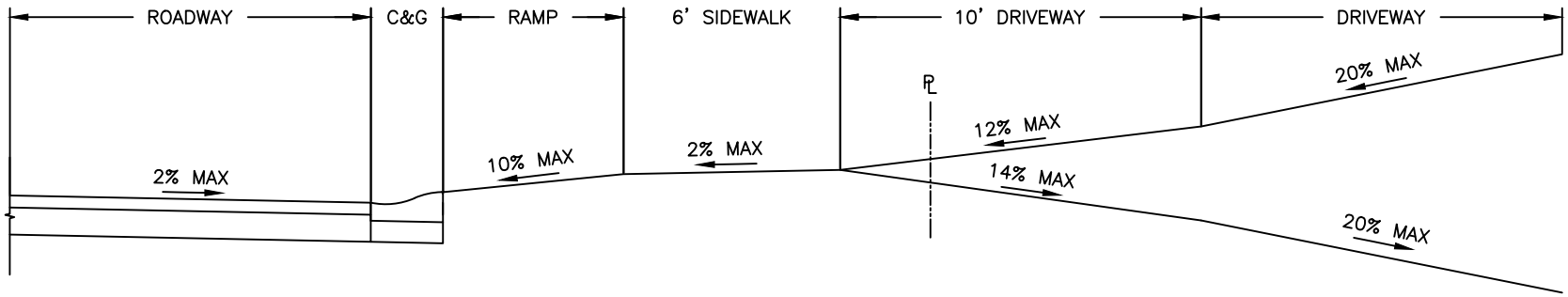

DRIVEWAY A
NO SCALE

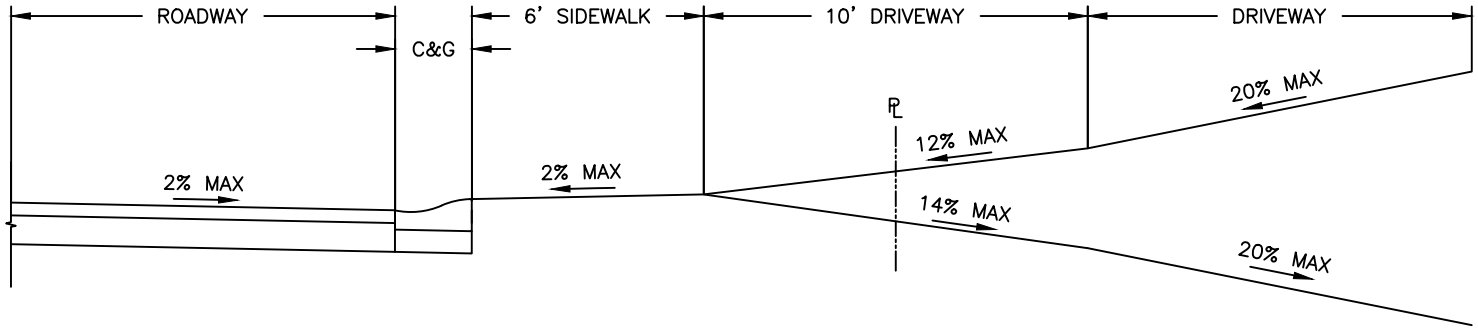

NOTES:
1. ALL SLOPE PERCENTAGES ARE THE MAXIMUM ALLOWED.

DRIVEWAY B
NO SCALE

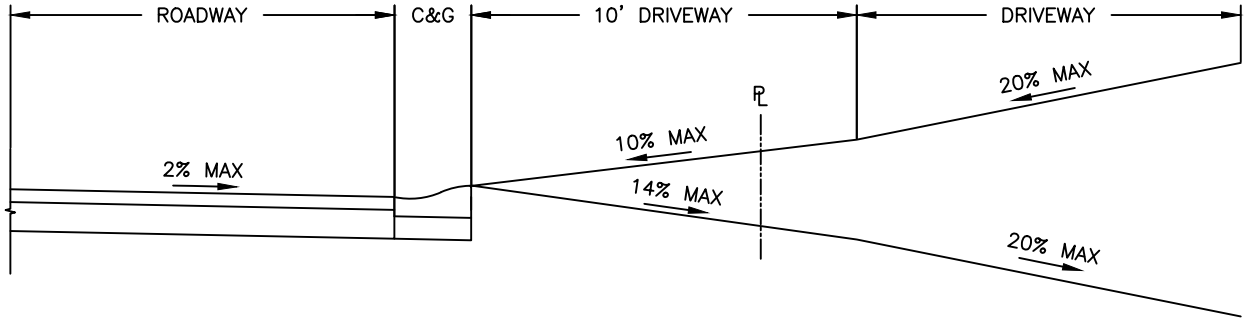

DRIVEWAY C
NO SCALE

CITY OF COTTONWOOD STANDARD DETAIL	RESIDENTIAL DRIVEWAY SECTION	CITY ENGINEER	REVISED	DETAIL NO.
			08/18	1255

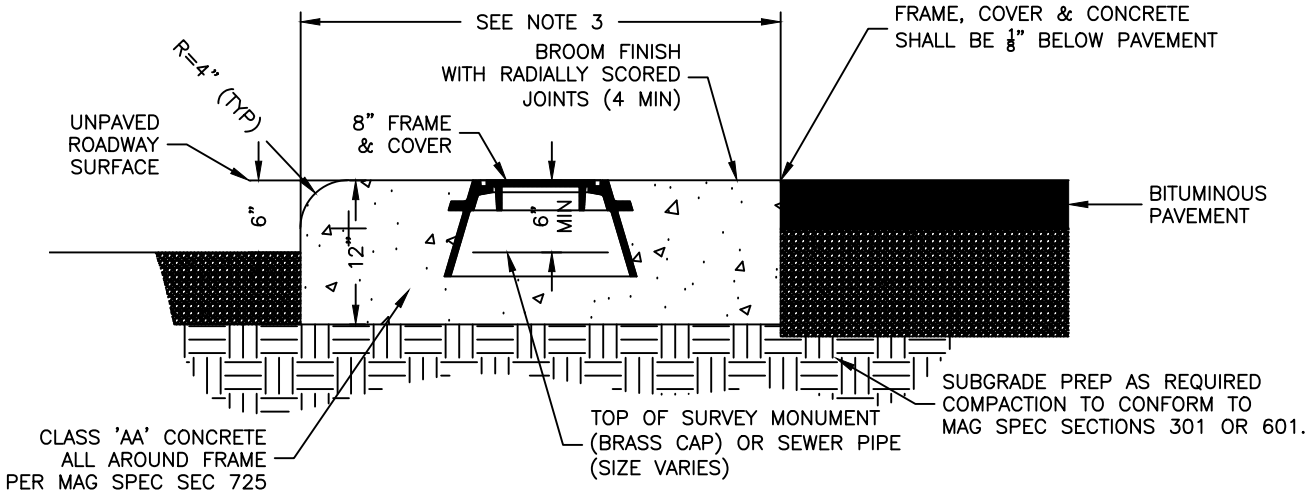

SURVEY MONUMENT OR SEWER CLEANOUT FRAME
& GRADE ADJUSTMENT
NO SCALE

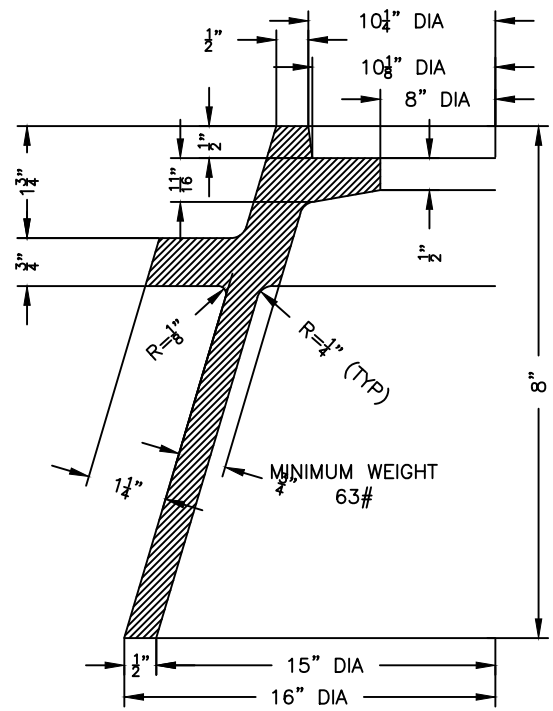

8"C.I. FRAME & COVER
NO SCALE

NOTES:
1. LETTERS ON COVER TO BE AS FOLLOWS: "WATER", "SEWER", "PRIVATE SEWER", OR "SURVEY" AS DIRECTED. TOTAL WIDTH OF WORD "WATER" 3 3/4", WIDTH OF WORD "SEWER" 3 3/4". TOTAL WIDTH OF WORD "SURVEY" 4 1/2". LETTER SIZE 5/8" x 3/4", RAISED 1/16" ABOVE LEVEL OF COVER, TYPE OF LETTERS TO BE SUBMITTED FOR APPROVAL.
2. U.S. MANUFACTURED IRON ONLY.
3. CONCRETE COLLAR SHALL BE 40" DIAMETER IN VEHICULAR TRAFFIC AREAS INCLUDING ALL EASEMENTS, AND 30" DIAMETER IN NON-TRAFFIC AREAS.

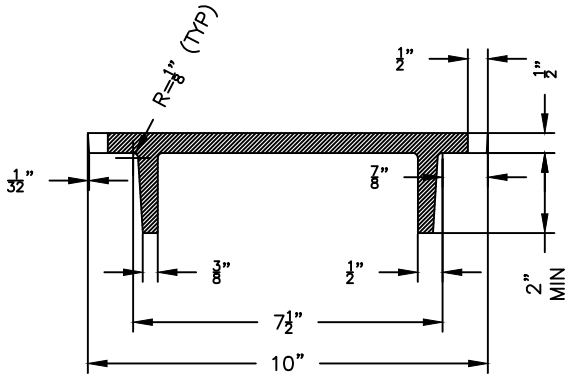

SECTION A–A

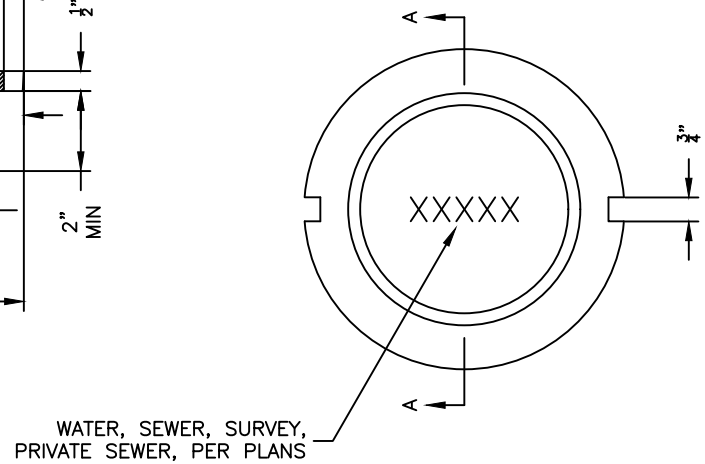

CITY OF COTTONWOOD STANDARD DETAIL	8" FRAME & COVER	CITY ENGINEER	REVISED	DETAIL NO.
			08/18	1270

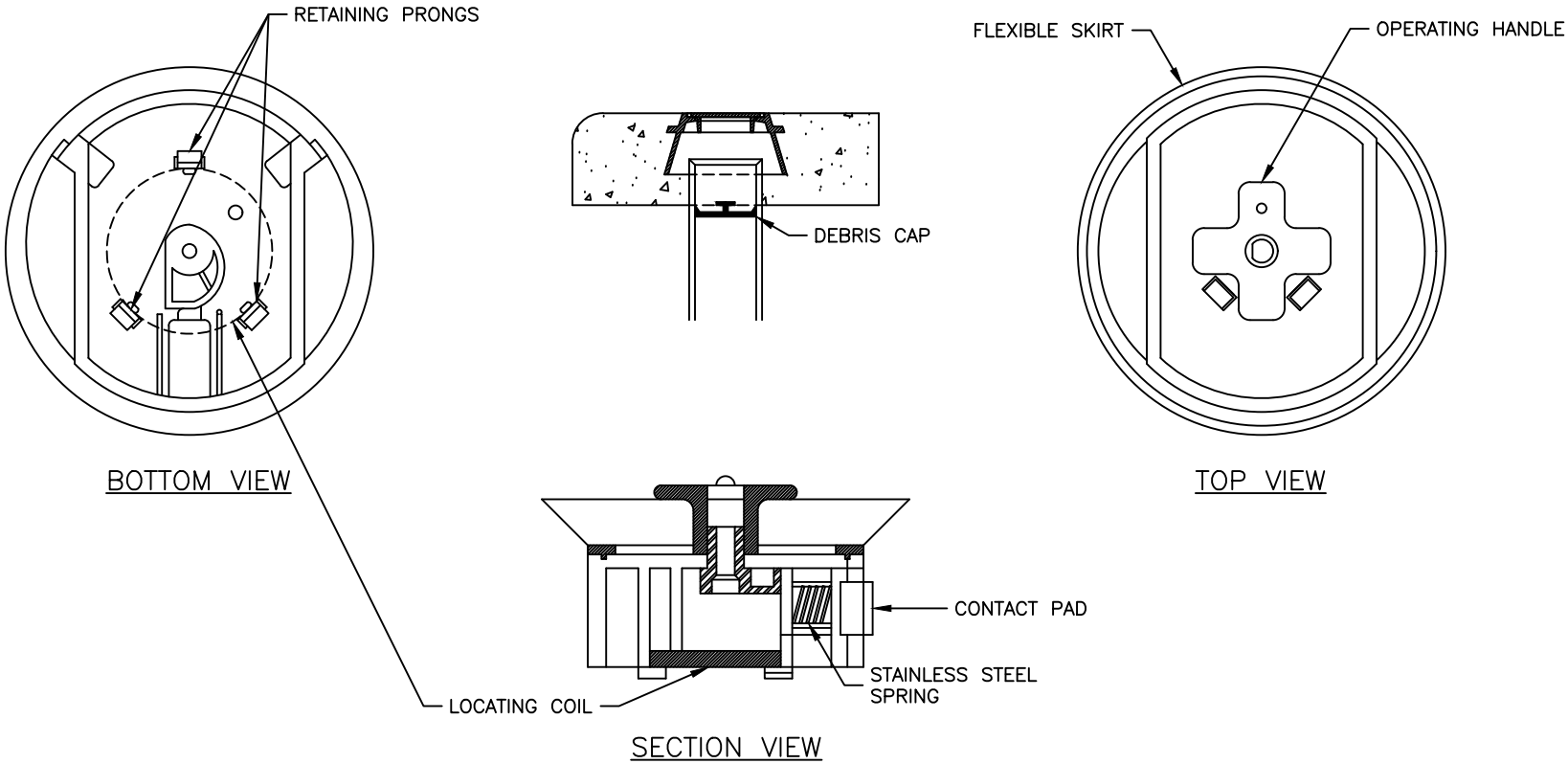

NOTES:

1. DEBRIS CAP SHALL BE INSTALLED AS CLOSE UNDER THE CAST IRON COVER WITHOUT INTERFERING WITH COVER OPERATION.
2. FLEXIBLE SKIRT SHALL BE TRIMMED TO PROVIDE SMOOTH CONTACT WITH THE INTERIOR DIAMETER OF THE PIPE.
3. DEBRIS CAP SHALL BE MANUFACTURED BY SW SERVICES, INC. PHOENIX, AZ OR APPROVED EQUAL.
4. DEBRIS CAP SHALL BE COMPRISED OF A HOLLOW MEMBER HAVING A CYLINDRICAL OUTER SURFACE, A CLOSURE FOR ONE END AND THREE POINT RESILIENT CONTACT PADS PROJECTING FROM THE OUTER SURFACE. THE CAP SHALL HAVE A FLEXIBLE SKIRT PROVIDING AN OUTWARD SEAL PREVENTING DEBRIS FROM GETTING PAST THE CAP. THE CAP MUST WITHSTAND, WITHOUT SLIPPAGE, A MINIMUM VERTICAL FORCE OF 50 POUNDS, AT A LOADING RATE OF 1.0 IN/MINUTE. THE CAP SHALL BE MOLDED USING GENERAL ELECTRIC ABS #HIM 4500. THE CAP SHALL HAVE RETAINING PRONGS TO RETAIN A STANDARD LOCATING COIL. SCOTCHMARK 4" DISC MARKER 141.7khz BY 3M OR APPROVED EQUAL.
5. DEBRIS CAPS WITH LOCATOR COILS SHALL BE INSTALLED ON ANY NEW UTILITY DEPARTMENT CIP PROJECTS, PUBLIC WORKS DEPARTMENT PAVING PROJECTS (NEW, REPLACEMENTS & OVERLAYS) AND ON PRIVATE DEVELOPMENT PROJECT IN THE FOLLOWING VALVE BOX LOCATIONS:
   - ALL MAJOR (ARTERIAL) STREETS
   - ANY UNPAVED AREAS
   - ALL EASEMENTS
   - GUTTER LOCATIONS
   - STREETS w/o CURB & GUTTER
   - COUNTY ROADS
   - GATE VALVE LOCATIONS ON WATERLINES >8" IN DIAMETER
   - ANY OTHER LOCATION INDICATED ON THE PLANS PER THE DESIGNER

CITY OF COTTONWOOD STANDARD DETAIL	DEBRIS CAP INSTALLATION	CITY ENGINEER	REVISED	DETAIL NO.
			08/18	1271

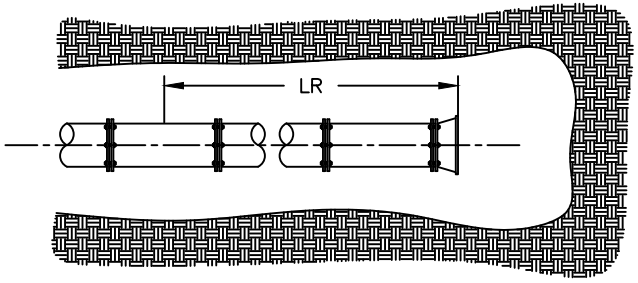

DEAD ENDS

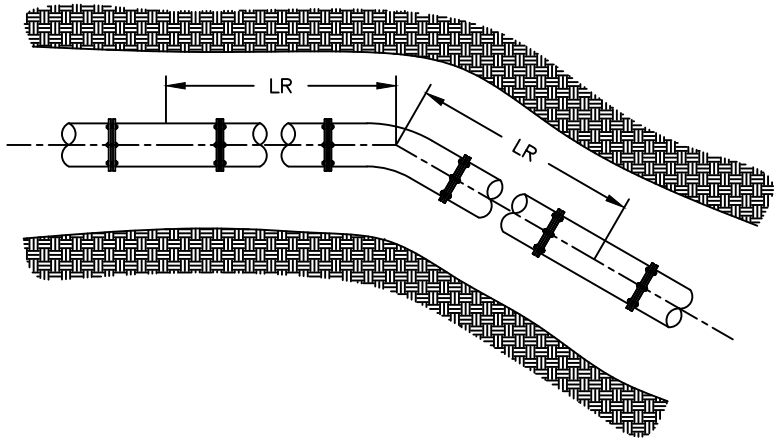

HORIZONTAL BENDS

LRN = SHORTEST LENGTH OF PIPE RESTRAINED TO THE RUN OF THE TEE FITTING (BOTH SIDES OF TEE).

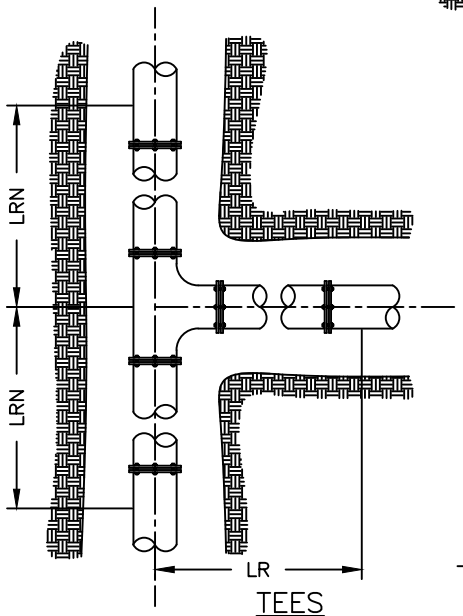

TEES

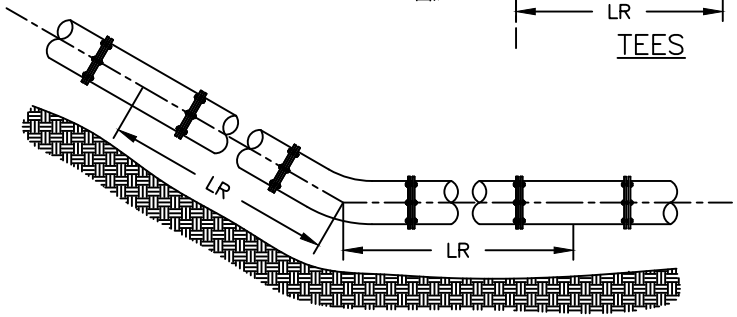

VERTICAL UP BENDS

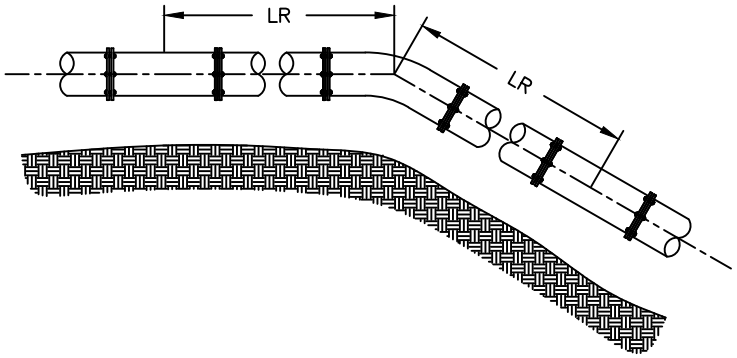

VERTICAL DOWN BENDS

CITY OF COTTONWOOD STANDARD DETAIL	JOINT RESTRAINT FOR DUCTILE IRON & POLYETHYLENE WRAPPED DUCTILE IRON WATER PIPES	CITY ENGINEER	REVISED	DETAIL NO.
			08/18	1303–1

RESTRAINED LENGTHS, LR, FOR DUCTILE IRON PIPE												
NOMINAL PIPE SIZE (INCHES)	HORIZONTAL BENDS			TEES		VERTICAL OFFSETS						VALVES & DEAD ENDS
						90° BEND FITTINGS		45° BEND FITTINGS		22.5° BEND FITTINGS		
	90°	45°	22.5°	LRN = 0'	LRN = 10'	DOWN BEND	UP BEND	DOWN BEND	UP BEND	DOWN BEND	UP BEND	
4	18	7	4	30	8	31	18	13	7	6	3	31
6	25	10	5	43	20	44	25	18	10	9	5	44
8	32	13	6	56	34	58	32	24	13	11	6	58
10	38	16	8	68	45	69	38	29	16	14	8	69
12	45	19	9	80	57	81	45	34	19	16	9	81
14	51	21	10	91	68	92	51	38	21	18	10	92
16	57	24	11	103	79	104	57	43	24	21	11	104
18	62	26	12	113	90	115	62	48	26	23	12	115
20	68	28	14	125	100	126	68	52	28	25	14	126
24	79	33	16	145	121	147	79	61	33	29	16	147

RESTRAINED LENGTHS, LR, FOR DUCTILE IRON PIPE WITH POLYETHYLENE WRAP												
NOMINAL PIPE SIZE (INCHES)	HORIZONTAL BENDS			TEES		VERTICAL OFFSETS						VALVES & DEAD ENDS
						90° BEND FITTINGS		45° BEND FITTINGS		22.5° BEND FITTINGS		
	90°	45°	22.5°	LRN = 0'	LRN = 10'	DOWN BEND	UP BEND	DOWN BEND	UP BEND	DOWN BEND	UP BEND	
4	26	11	5	69	18	72	26	30	11	18	5	72
6	36	15	7	99	47	102	36	42	15	20	7	102
8	47	19	9	130	78	133	47	55	19	26	9	133
10	56	23	11	157	103	159	56	66	23	32	11	159
12	65	27	13	185	131	187	65	77	27	37	13	187
14	74	31	15	211	156	214	74	89	31	42	15	214
16	82	34	16	238	183	241	82	100	34	48	16	241
18	90	37	18	263	207	266	90	110	38	53	18	266
20	98	41	20	289	233	292	98	121	41	58	20	292
24	113	47	22	337	280	340	113	141	47	68	22	340

NOTES:

1. ALL JOINTS WITHIN THE SPECIFIED LENGTH 'LR' SHALL BE RESTRAINED. ALL LENGTHS ARE GIVEN IN FEET.
2. THE MAXIMUM TEST PRESSURE SHALL NOT EXCEED 200 PSI.
3. THE MINIMUM DEPTH OF BURY SHALL BE 4' TO TOP OF PIPE.

CITY OF COTTONWOOD STANDARD DETAIL	JOINT RESTRAINT FOR DUCTILE IRON & POLYETHYLENE WRAPPED DUCTILE IRON WATER PIPES	CITY ENGINEER	REVISED	DETAIL NO.
			08/18	1303-2

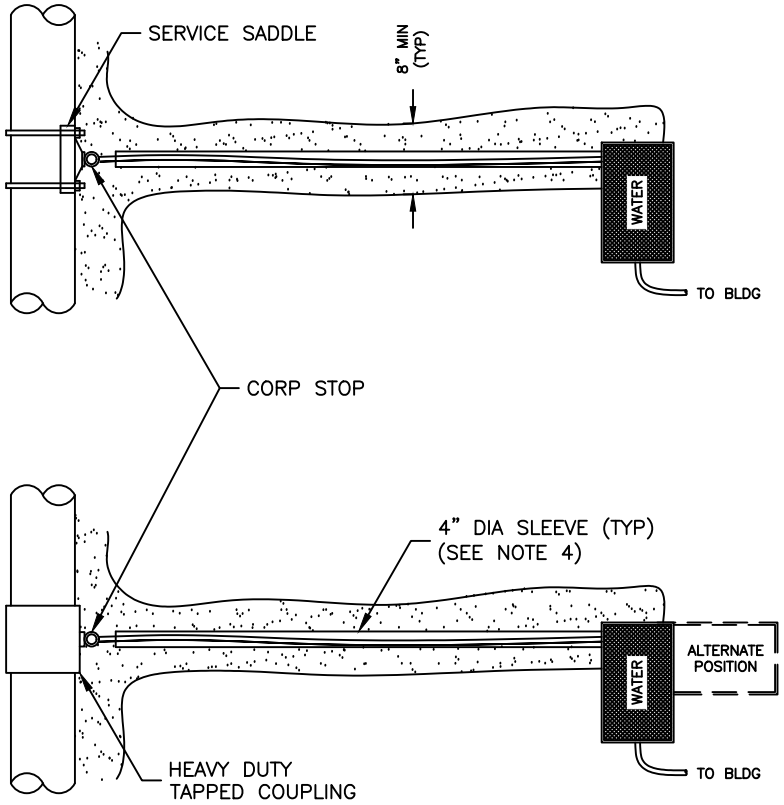

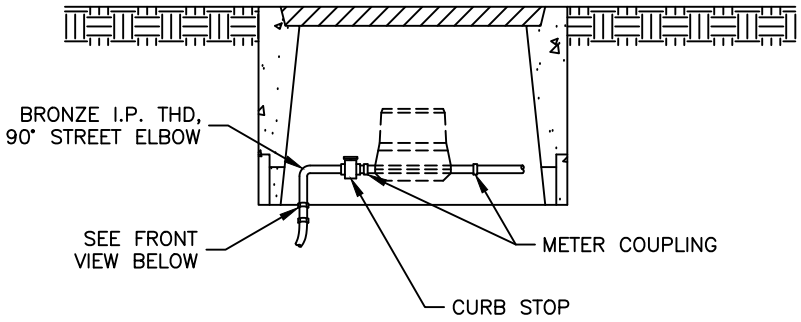

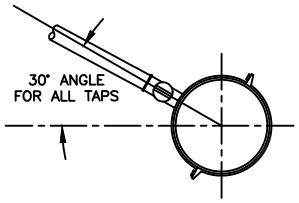

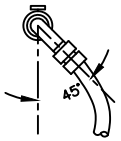

FRONT VIEW

NOTES:

1. ALL FITTINGS SHALL BE BRASS OR POLY TUBING (CTS), AND SHALL BE CONTINUOUS BETWEEN THE WATER MAIN AND WATER METER.
2. NEW WATER SERVICE TAPS SHALL BE INSTALLED USING AN ALL–BRONZE DOUBLE–STRAP TAPPING SADDLE OR A TAPPED COUPLING.
3. A MINIMUM OF 30" OF COVER SHALL BE PROVIDED FOR WATER SERVICES.
4. WATER SERVICES SHALL BE SLEEVED BENEATH ROADWAYS VIA A 4" PVC SLEEVE (SCH 80, WHITE).
5. WATER SERVICE INCLUDES THE CORP STOP, SERVICE PIPE, PVC SLEEVE, APPURTENANT FITTINGS, CURB STOP, METER BOX AND COVER.
6. ALL WATER METERS WILL BE INSTALLED BY THE CITY OF COTTONWOOD UTILITIES DEPT.

CITY OF COTTONWOOD STANDARD DETAIL	1" & 2" WATER SERVICE CONNECTIONS	CITY ENGINEER	REVISED	DETAIL NO.
			08/18	1316

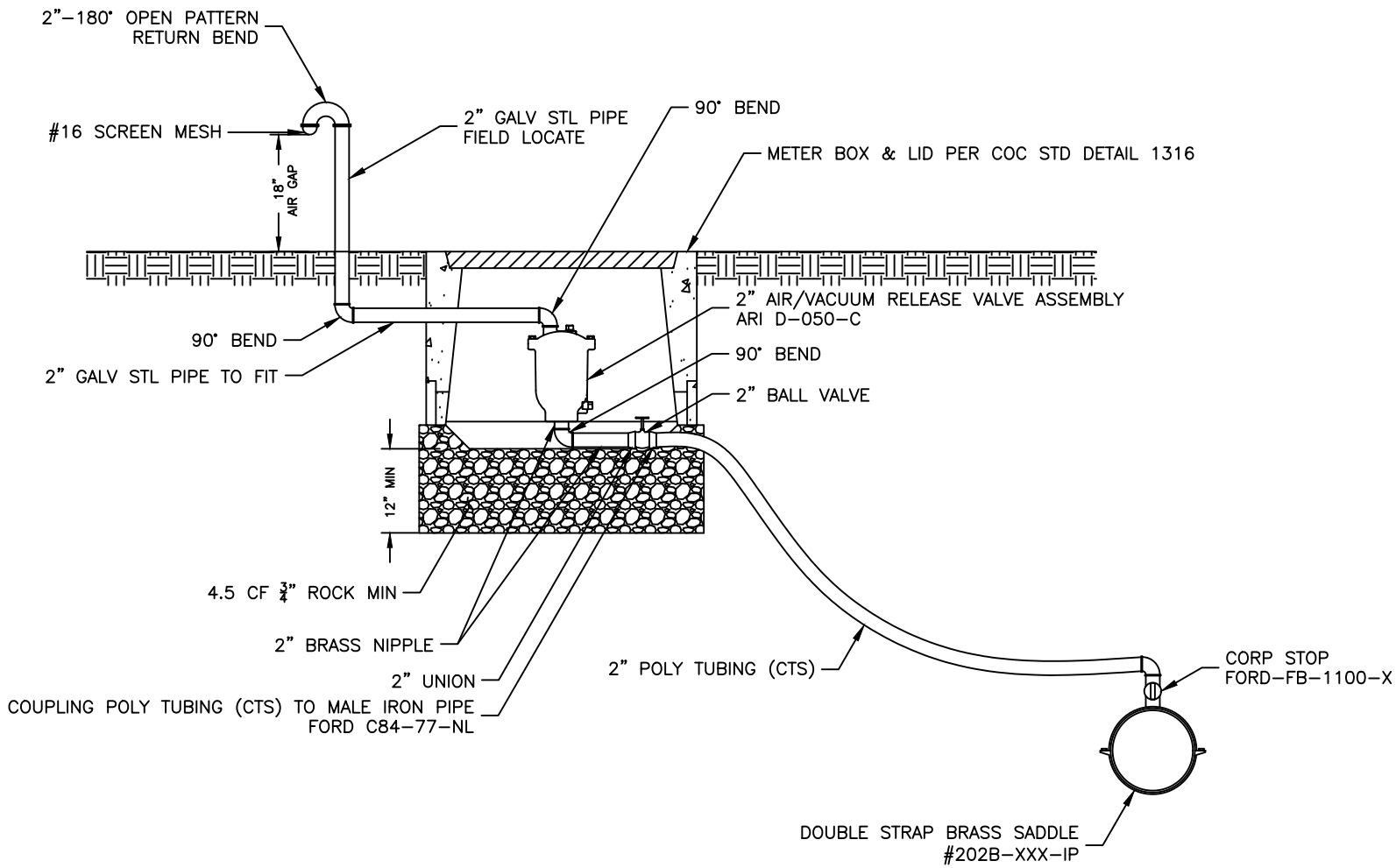

NOTES:

1. ALL FITTINGS SHALL BE BRASS OR POLY TUBING (CTS) FROM WATER MAIN TO AIR & VACUUM ASSEMBLY.
2. 2" GALVANIZED PIPE ABOVE GRADE SHALL BE PAINTED WITH 2 COATS OF RUSTOLEUM HIGH GLOSS WHITE PAINT.
3. AIR & VACUUM RELEASE VALVE ASSEMBLY MUST BE INSTALLED AT HIGHEST POINT OF LINE. IF HIGH POINT FALLS IN A LOCATION WHERE ASSEMBLY CANNOT BE INSTALLED, PROVIDE ADDITIONAL DEPTH OF LINE TO CREATE HIGHPOINT AT A LOCATION WHERE THE ASSEMBLY CAN BE INSTALLED.
4. LOCATE AIR & VACUUM METER BOX OUTSIDE OF TRAFFIC AREAS, BEHIND CURB. IN SIDEWALKS AND AREAS WITH VEHICULAR TRAFFIC, USE OLYMPIC FOUNDRY SM–30 CAST IRON BOX & COVER.

CITY OF COTTONWOOD STANDARD DETAIL	2" AIR VACUUM RELEASE VALVE ASSEMBLY	CITY ENGINEER	REVISED	DETAIL NO.
			08/18	1317

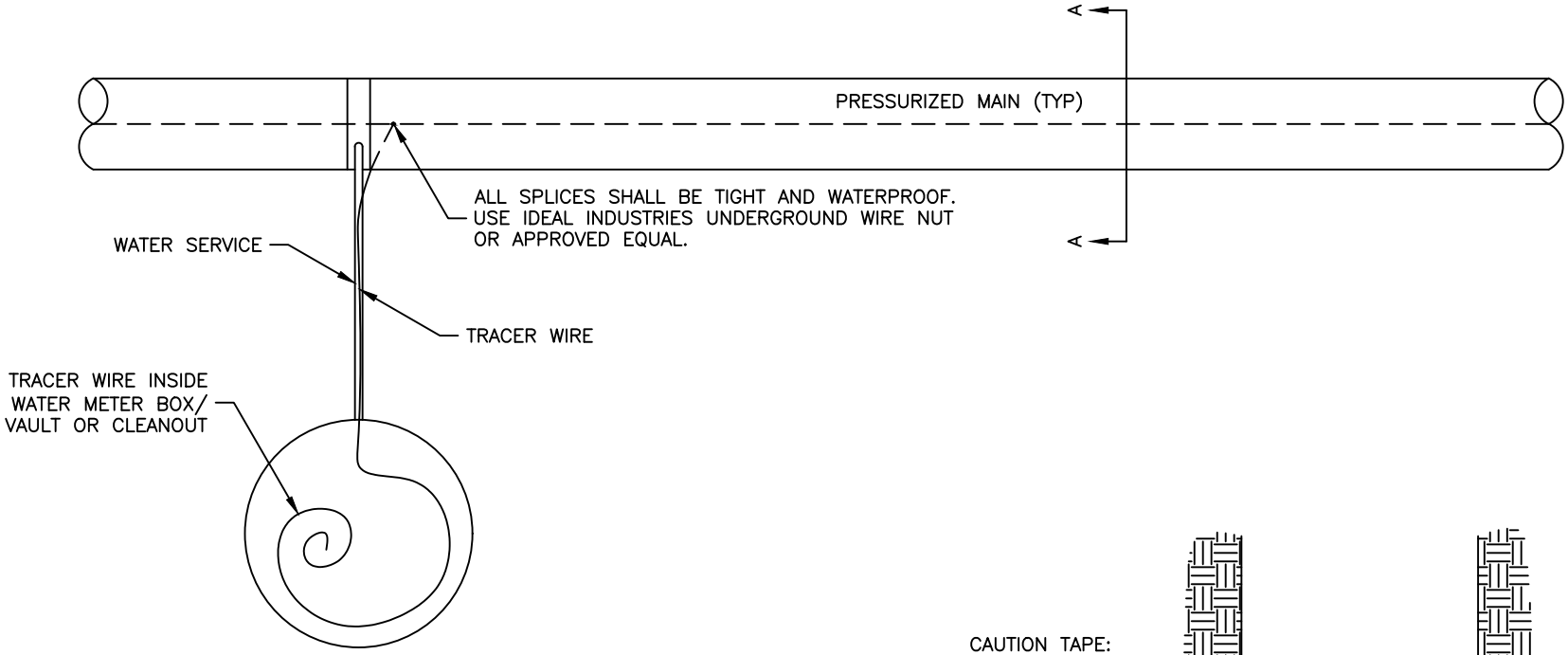

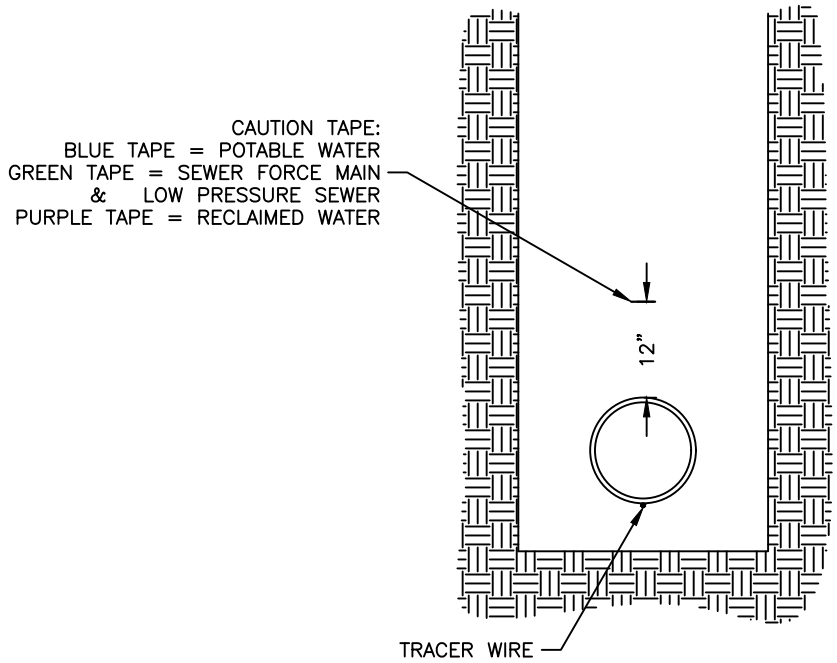

SECTION A–A

NOTES:

1. TRACER WIRE SHALL BE REQUIRED FOR ALL PRESSURE PIPE INSTALLATION IN THE CITY OF COTTONWOOD AND AS INDICATED ON OTHER STANDARD DETAILS. TRACER WIRE SHALL BE #10 AWG HS–CCS, 30 MIL HDPE INSULATION.
2. FINAL CONTINUITY TESTING FOR ACCEPTANCE OF TRACER WIRE SHALL BE MADE AT PROJECT COMPLETION.
3. WIRE IS TO BE ATTACHED TO ALL APPURTENANCES.
4. TRACER WIRE IS TO BE PLACED AT BOTTOM CENTER OF PIPE AND SECURED BY TAPE AT A MINIMUM OF 6' INTERVALS.
5. THIS DETAIL DOES NOT PERTAIN TO STRAIGHT RUN GRAVITY SANITARY SEWERS.
6. TRACER WIRE INSTALLATION SHALL BE USED AT ALL FIRE HYDRANTS, SEWER WET WELLS, FORCE MAIN DISCHARGE MANHOLES, FORCE MAIN CLEANOUTS, FORCE MAIN VALVE LOCATIONS AND LOW PRESSURE SEWER MAIN APPURTENANCES IN ACCORDANCE WITH COTTONWOOD STD DETAIL 1319–2.

CITY OF COTTONWOOD STANDARD DETAIL	TRACER WIRE FOR ALL PRESSURE PIPE SYSTEMS	CITY ENGINEER	REVISED	DETAIL NO.
			08/18	1319–1

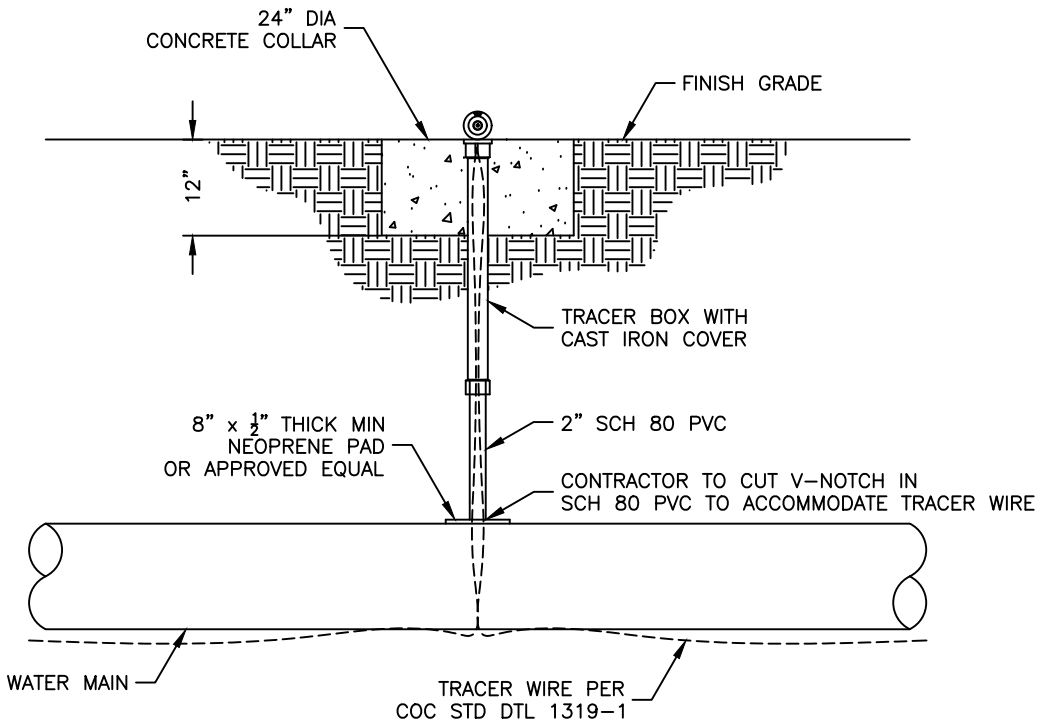

NOTES:

1. TRACER BOX AND CAST IRON COVER SHALL BE COPPERHEAD INDUSTRIES, LLC SNAKEPIT OF APPROVED EQUAL, MODEL RB14*TP OR CD14*TP AS APPROPRIATE, LID COLOR SHALL COINCIDE WITH TYPE OF UTILITY.
2. MAXIMUM DISTANCE BETWEEN TRACER WIRE POINT OF CONTACT SHALL BE 500'.
3. ATTACH TRACER WIRE TO PIPE AT 6' INTERVALS (MINIMUM).

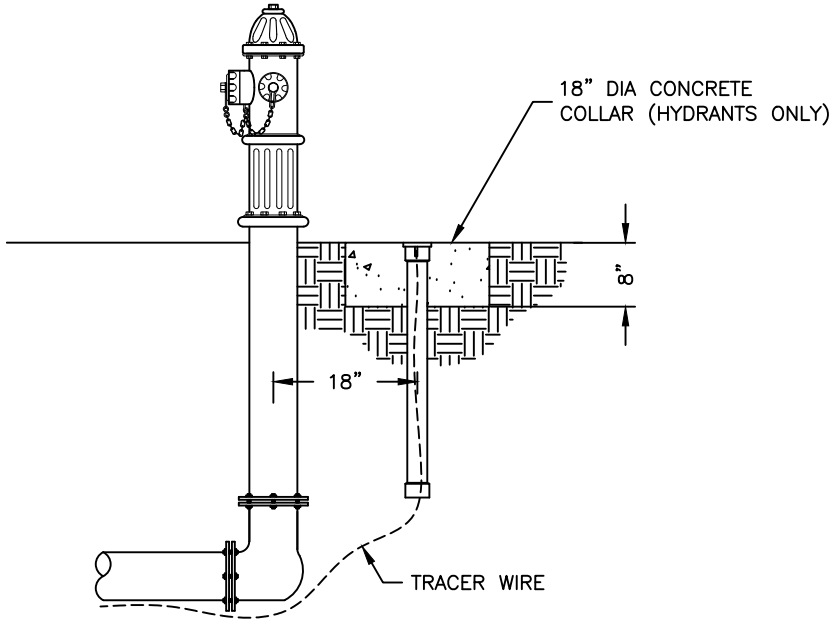

FIRE HYDRANT TRACER STATION

CITY OF COTTONWOOD STANDARD DETAIL	TRACER WIRE TEST STATION	CITY ENGINEER	REVISED	DETAIL NO.
			08/18	1319-2

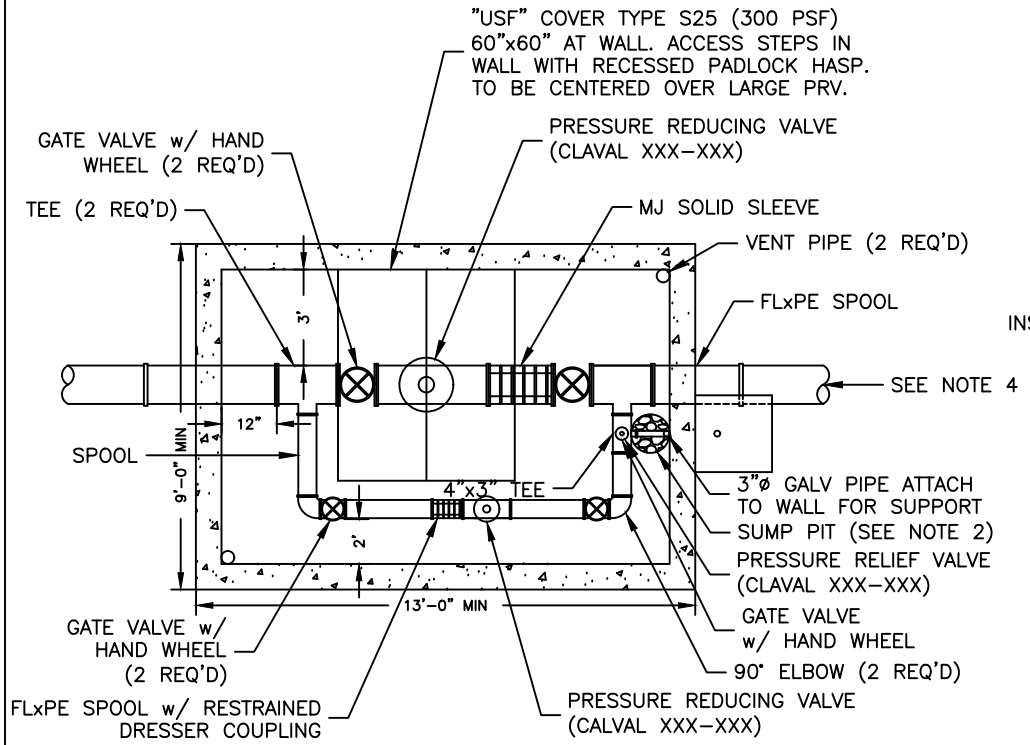

PLAN VIEW

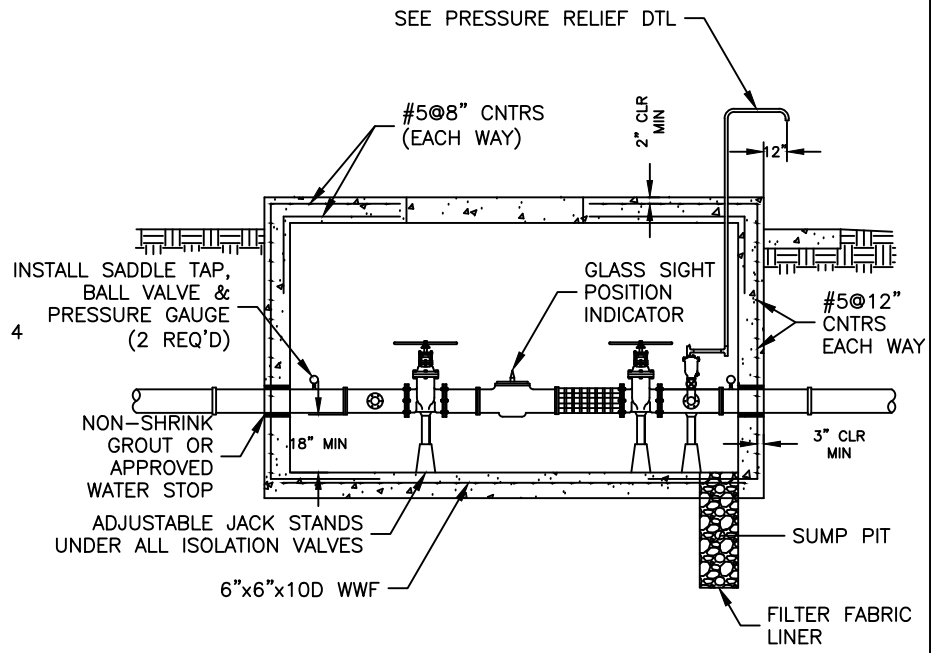

PROFILE VIEW

NOTES:

1. CONCRETE SHALL BE CLASS 'A' PER MAG SPEC SEC 725. ALTERNATE DESIGN TO BE 8" CMU WALLS, GROUT ALL CELLS SOLID, USE 2–#4 REBAR IN BOND BEAM AT TOP OF WALLS & AT 30" ABOVE FOOTING. #4 REBAR @ 16" CENTERS FOR VERTICALS.
2. SUMP PIT TO BE 8 CUBIC FEET CLEAN #57 ROCK LINED WITH FILTER FABRIC (MIRAFI TYPE 140NL OR APPROVED EQUAL).
3. FITTINGS AND VALVES SHALL BE COMPRISED OF DUCTILE IRON WITH FLANGED CONNECTIONS UNLESS NOTED OTHERWISE.
4. MAIN LINE PIPING SHALL BE RESTRAINED EITHER SIDE OF THE PRV VAULT PER COC STD DETAILS 1303–1 & 1303–2 PER VALVES & DEAD END CONDITION.
5. ALL VALVES SHALL BE RESILIENT SEAT GATE VALVE UNLESS NOTED OTHERWISE.
6. SLOPE FLOOR AT 5% TO SUMP.
7. PRESSURE REDUCING CLAVAL SHALL INCLUDE THE FOLLOWING FEATURES:
   - X46A FLOW STRAINER
   - CK2 COOK (ISOLATION VALVE)
   - CV SPEED CONTROL (OPENING & CLOSING)
   - ALL PRV PILOT SYSTEMS SHALL BE STAINLESS STEEL HIGH PRESSURE TUBING.
6. FINAL PRESSURE SETTINGS TO BE DETERMINED BY THE CITY OF COTTONWOOD.

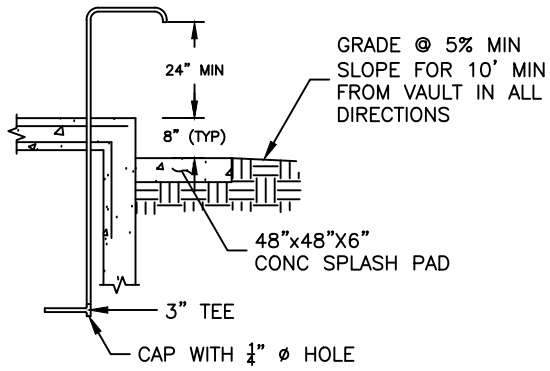

PRESSURE RELIEF DETAIL

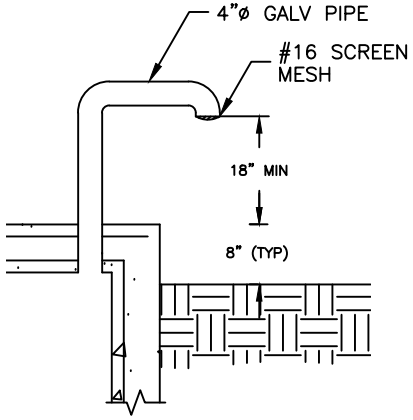

VENT PIPE DETAIL

CITY OF COTTONWOOD STANDARD DETAIL	PRESSURE REDUCING VALVES	CITY ENGINEER	REVISED	DETAIL NO.
			08/18	1323

NOTES:

1. VALVE BLOCKING PER MAG STD DETAIL 301.
2. TAPS SHALL BE MADE BY CITY CREWS AT PREVAILING RATES OR BY APPROVED CONTRACTORS WHEN ALLOWED BY THE CITY.
3. INSTALL TEMPORARY BLOCKING UNDER VALVE BEFORE TAP IS MADE. ALL FLANGE BOLTS SHALL BE CLEAR OF FOOTING.
4. TAPPING SLEEVES SHALL BE FORD FTSS OR APPROVED EQUAL.
5. INSTALLATION SHALL BE LEAK TESTED TO A MINIMUM OF 200 PSI FOR 15 MINUTES PRIOR TO TAP.
6. TAPPING SLEEVE SHALL BE PLACED AT A MINIMUM OF 3' FROM ANY BELL, COUPLING, VALVE, FITTING, OR OTHER OBSTRUCTION.
7. PROTECT ALL CONCRETE CONTACT AREAS WITH 8 MIL PLASTIC SHEETING.
8. JOINT RESTRAINT PER COTTONWOOD STD DETAIL 1303 USING A DEAD END ON NEW CONSTRUCTION.
9. INSTALL BOX, COVER & VALVE BOX STABILIZER PER COTTONWOOD STD DETAIL 1391.
10. ALL EXCAVATIONS SHALL BE OSHA COMPLIANT.
11. ALL PIPE, VALVES, FITTINGS, AND APPURTENANCES SHALL BE MANUFACTURED IN THE USA.
12. MINIMUM EXCAVATION LENGTH FOR THE TAPPING OPERATION SHALL BE 5' FROM THE FACE OF VALVE.

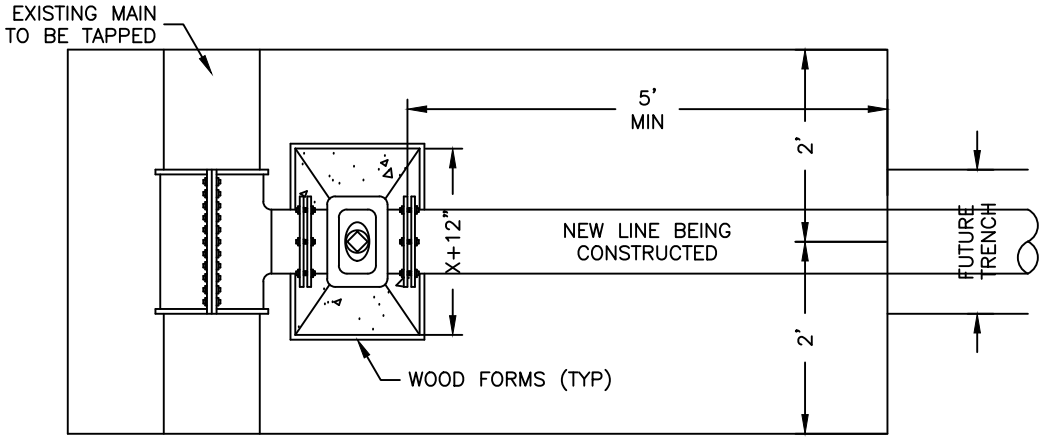

PLAN

PLAN SYMBOL

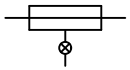

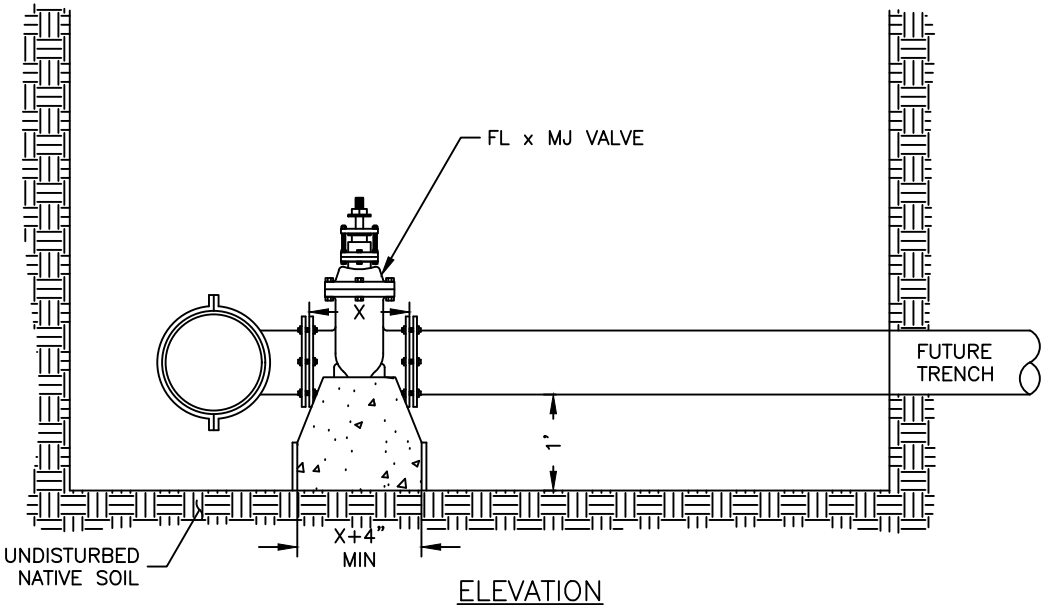

ELEVATION

CITY OF COTTONWOOD STANDARD DETAIL	TAPPING SLEEVES & VALVES	CITY ENGINEER	REVISED	DETAIL NO.
			08/18	1340

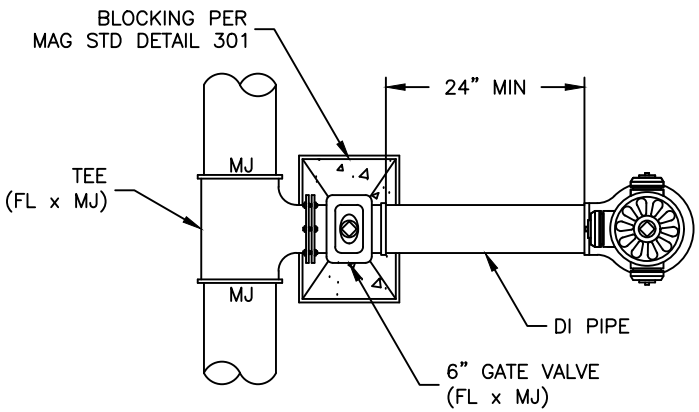

PLAN

NOTES:

1. ALL HYDRANTS WHICH ARE PRIVATELY MAINTAINED AND OWNED ARE TO BE PAINTED RED.
2. ALL HYDRANTS TO BE WATEROUS, MUELLER OR CLOW.
3. HYDRANT LEADS SHALL HAVE NO HORIZONTAL BENDS.
4. TRACER WIRE SHALL CONFORM TO COTTONWOOD STD DETAIL 1319-1.
5. MECHANICALLY RESTRAIN ALL JOINTS FROM HYDRANT TO HYDRANT TEE. THRUST BLOCKS ARE NOT ALLOWED.
6. INSTALL TRACE WIRE TEST STATION PER COTTONWOOD STD DETAIL 1319-2.
7. SEE COTTONWOOD STD DETAIL 1363 FOR VERTICAL ADJUSTMENT.
8. ALL DUCTILE IRON PIPE AND FITTINGS SHALL BE MANUFACTURED IN THE USA.
9. 4 $\frac{1}{2}$" PUMPER CONNECTION TO FACE CURB.

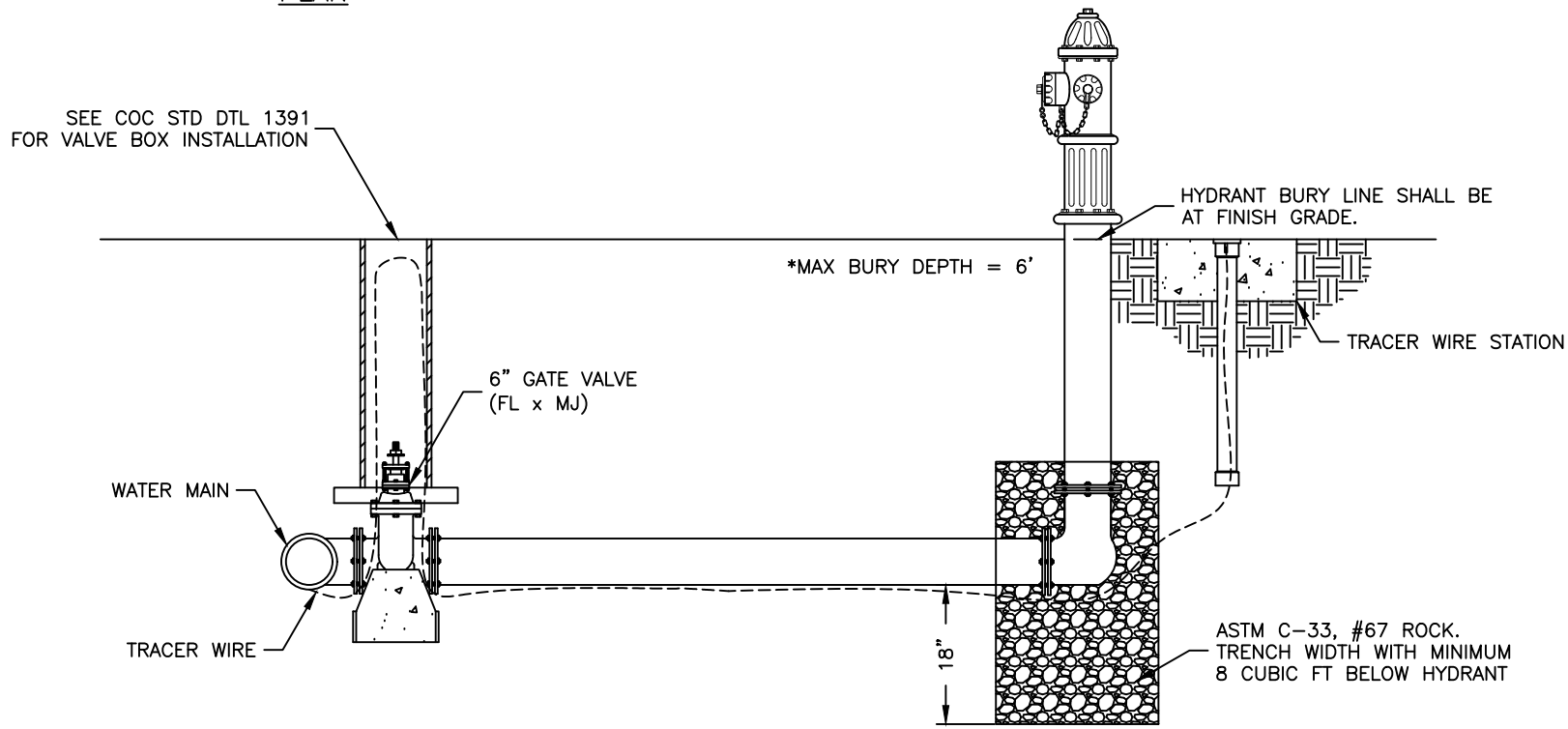

PROFILE

CITY OF COTTONWOOD STANDARD DETAIL	FIRE HYDRANT INSTALLATION	CITY ENGINEER	REVISED	DETAIL NO.
			08/18	1360

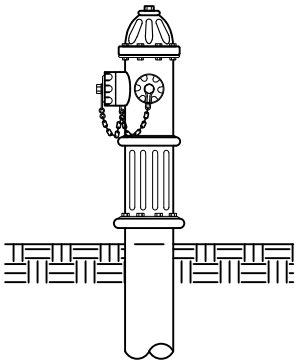

HEIGHT REQUIREMENTS

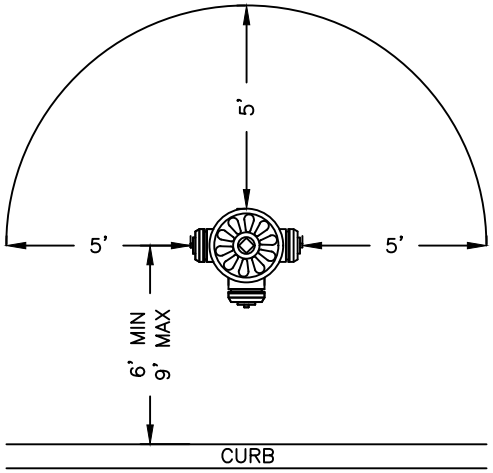

HYDRANT OBSTRUCTION CLEARANCE

NOTES:

1. OBSTRUCTIONS SUCH AS UTILITY POLES, STREET SIGNS, IRRIGATION BOXES, FENCES, LANDSCAPE VEGETATION, ETC. MUST NOT BE PLACED BETWEEN THE CURB AND HYDRANT.
2. SOME LOCATIONS APPLY AT EITHER END OF CURB RETURNS.
3. ALL HYDRANTS WHICH ARE PRIVATELY MAINTAINED OR OWNED ARE TO BE PAINTED RED.
4. IN PARKING LOT ISLANDS, HYDRANT SHALL BE A MINIMUM OF 3' IN ALL DIRECTIONS FROM BACK OF CURB.
5. HYDRANTS TO BE CLEAR OF LANDSCAPE & VEGETATION WITHIN A 5' RADIUS.

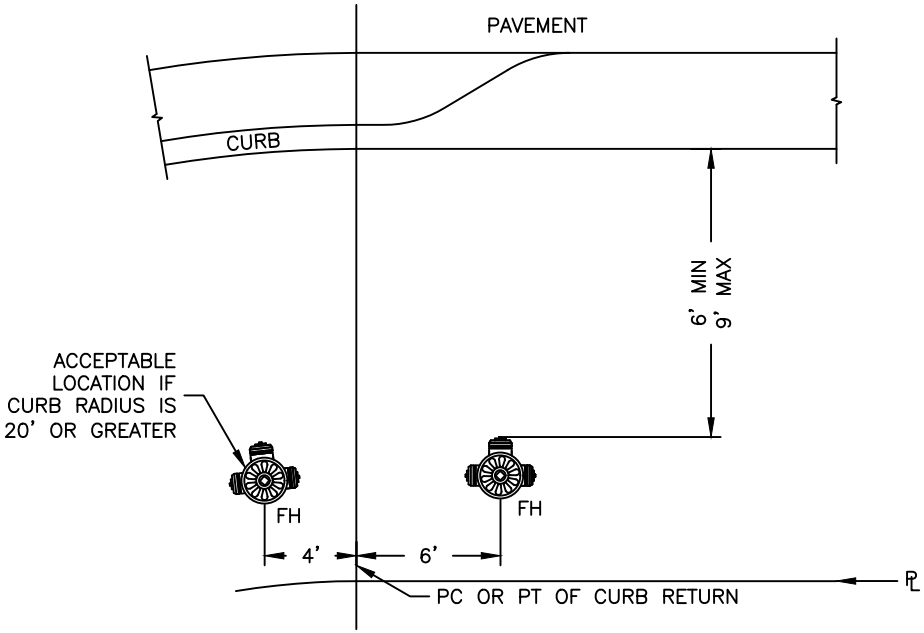

PARKWAY AREA OR NO SIDEWALK

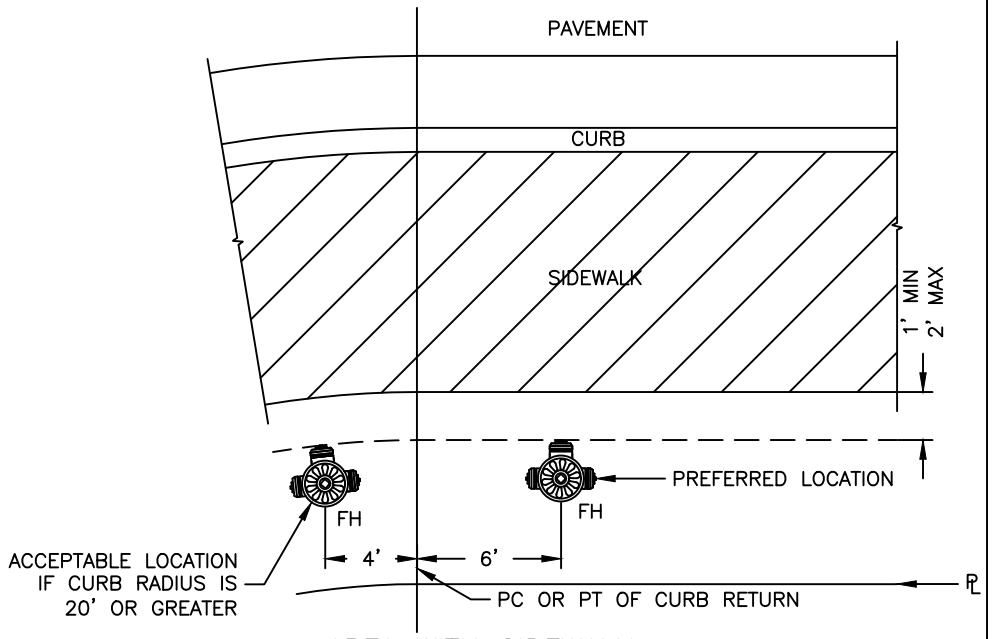

AREA WITH SIDEWALK

CITY OF COTTONWOOD STANDARD DETAIL	LOCATIONS FOR NEW FIRE HYDRANTS	CITY ENGINEER	REVISED	DETAIL NO.
			08/18	1362

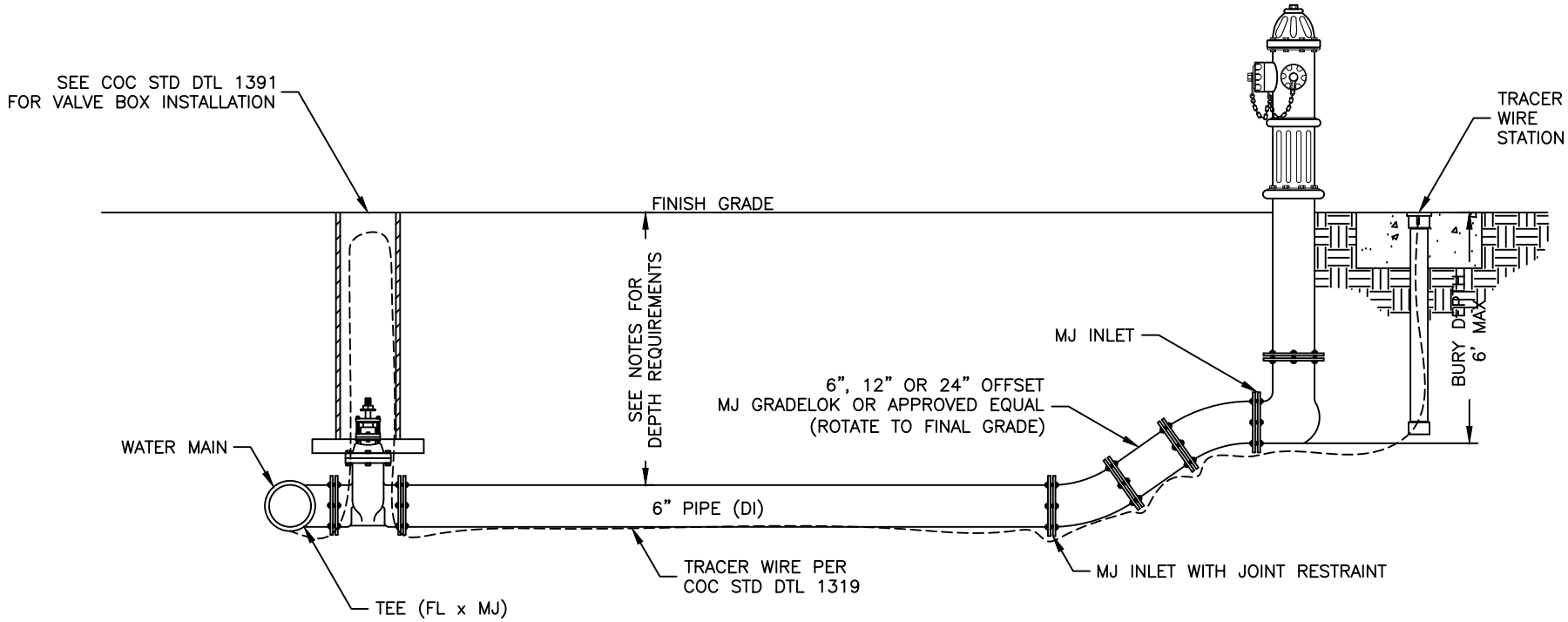

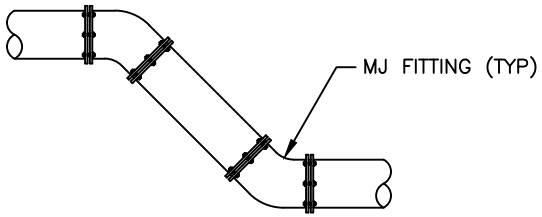

45° BEND ALTERNATE

NOTES:

1. THIS DETAIL IS FOR VERTICAL DEFLECTION ONLY. REFER TO COTTONWOOD STD DETAIL 1360 FOR HYDRANT DETAILS AND 1391 FOR VALVE BOX DETAILS.
2. MECHANICALLY RESTRAIN ALL JOINTS FROM HYDRANT TO HYDRANT TEE. THRUST BLOCKS ARE NOT ALLOWED.
3. INSTALL TRACER WIRE TEST STATION PER COTTONWOOD STD DETAIL 1319-2.
4. ALL PIPE, VALVES, FITTINGS, AND APPURTENANCES SHALL BE MANUFACTURED IN THE USA.
5. IF THE DEPTH OF THE MAIN EXCEEDS 8' CONTRACTOR SHALL INSTALL 2-45° BENDS IN LIEU OF GRADELOK.

CITY OF COTTONWOOD STANDARD DETAIL	FIRE HYDRANT VERTICAL DEFLECTION	CITY ENGINEER	REVISED	DETAIL NO.
			08/18	1363

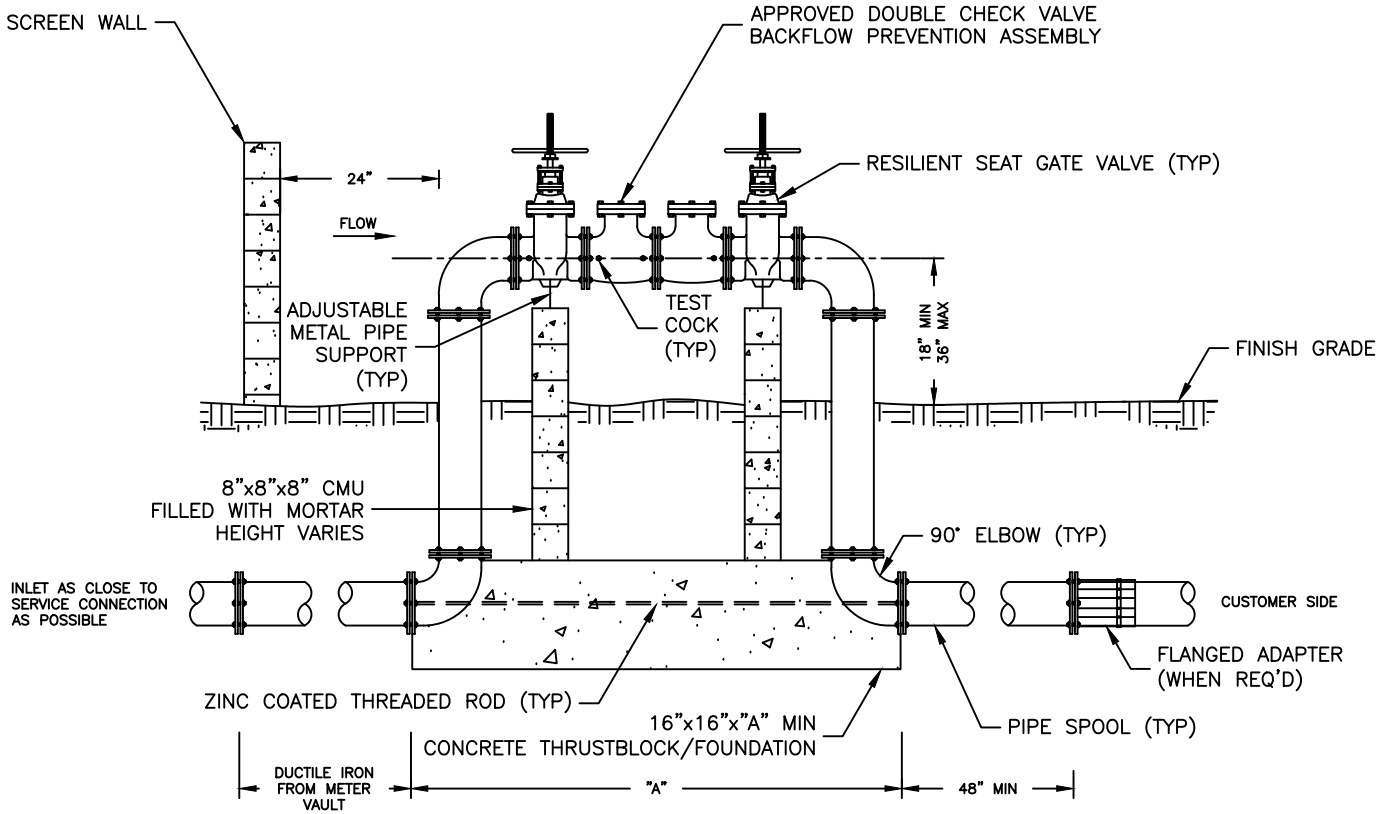

NOTES:

1. BACKFLOW ASSEMBLIES MUST BE TESTED BY A CERTIFIED TESTER THAT IS RECOGNIZED BY THE CITY OF COTTONWOOD.
2. BACKFLOW PREVENTERS SHALL BE PAINTED LIGHT TAN OR A COLOR TO MATCH THE BUILDING. DO NOT PAINT THE NAME PLATE OR ANY BRASS PARTS ON THE ASSEMBLY.
3. FOR BACKFLOW PREVENTERS REQUIRING GUARD POSTS SEE DETAIL 13XX. BACKFLOW PREVENTERS ENCLOSED BY SCREENING SHALL MAINTAIN A 24 INCH CLEARANCE AROUND THE ASSEMBLY.
4. FINISHED GRADE UNDERNEATH THE BACKFLOW PREVENTER SHALL BE @ 95% COMPACTION.
5. BACKFLOW PREVENTERS ON FIRE LINES MAY REQUIRE TAMPER SWITCHES ON THE SHUT OFF VALVES. CONTACT CITY OF COTTONWOOD FIRE DEPT.
6. CALL FOR UNDERGROUND INSPECTION BEFORE BACKFILLING TRENCH.
7. VERTICAL INSTALLATIONS OF ASSEMBLIES ON FIRE SPRINKLER SYSTEMS ARE ALLOWED USING ASSEMBLIES APPROVED FOR USE IN THE VERTICAL POSITION ON FIRES SYSTEMS.
8. APPROVALS FOR BACKFLOW ASSEMBLIES MUST HAVE SEAL APPROVAL FROM THE AMERICAN SOCIETY OF SANITATION ENGINEERS. BACKFLOW ASSEMBLIES INSTALLED ON FIRE SUPPRESSION SYSTEMS MUST ALSO HAVE APPROVAL FORM UNDERWRITERS LABORATORIES AND/OR FACTORY MUTUAL RESEARCH CORPORATION.
9. RESILIENT SEAT GATE VALES: OS&Y (FIRE LINE CONNECTION)
   NRS (NON FIRE LINE CONNECTION)
10. PIPE SPOOLS: FLANGED, DUCTILE IRON PIPE, 3" THRU 10", MEGA LUG OR APPROVED EQUAL MAY BE USED ON UNDERGROUND JOINTS.
11. 90° ELBOWS: FLANGED, DUCTILE IRON PIPE, 3" THRU 10", MEGA LUG OR APPROVED EQUAL MAY BE USED ON UNDERGROUND JOINTS.
12. ZINC COATED THREADED ROD: BOLT TO FLANGES AS SHOWN ON BOTH SIDES
    $\frac{5}{8}$" DIA FOR 3" AND 4" PIPING
    $\frac{3}{4}$" DIA FOR PIPING OVER 4"
13. TEST COCKS WITH BRASS PLUGS OR ADAPTORS w/ CAPS INSTALLED (4 REQ'D)

CITY OF COTTONWOOD STANDARD DETAIL	DUAL CHECK VALVE BACKFLOW PREVENTION ASSEMBLY FOR ASSEMBLIES 3 INCHES THRU 10 INCHES	CITY ENGINEER	REVISED	DETAIL NO.
			08/18	1364

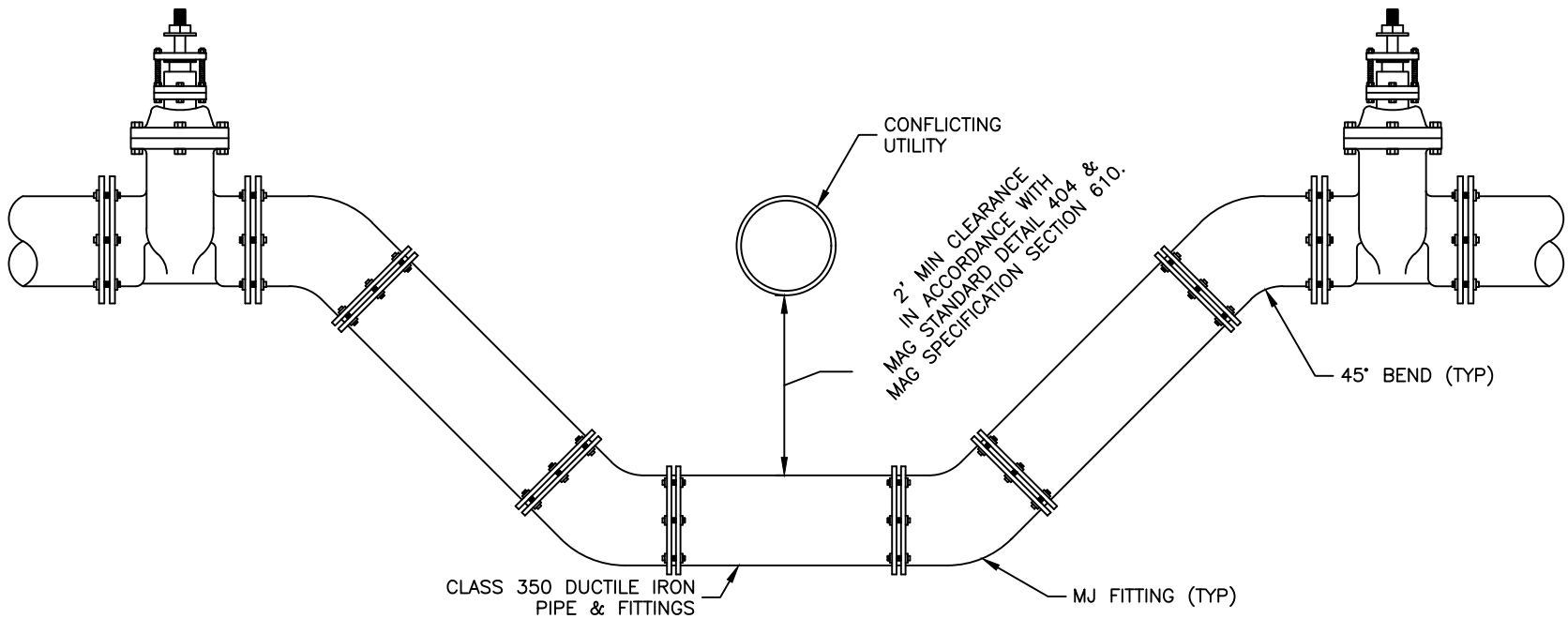

NOTES:

1. ALL PIPE, VALVES, FITTINGS, AND APPURTENANCES SHALL BE MANUFACTURED IN THE USA.
2. ENTIRE VERTICAL REALIGNMENT SHALL BE MECHANICALLY RESTRAINED CLASS 350 DIP PER COTTONWOOD STD DETAILS 1303–1 & 1303–2. RESTRAINED LENGTHS FROM VALVES SHALL BE THE SAME AS DEAD ENDS ON NEW CONSTRUCTION.
3. BOTTOM OF VERTICAL ALIGNMENT SHALL BE ONE PIECE. IF JOINTS ARE REQUIRED, WATER MAIN SEGMENT SHALL BE CENTERED BELOW PIPE OR IN A CASING PIPE.
4. NO SERVICE CONNECTIONS SHALL BE LOCATED WITHIN VERTICAL REALIGNMENTS.
5. AIR RELEASE VALVE TO BE INSTALLED ON THE VERTICAL REALIGNMENT AT THE HIGH POINT OF THE LOW SIDE.
6. TRACER WIRE SHALL BE INSTALLED PER COTTONWOOD STD DETAIL 1319.
7. TRENCH TO BE BACKFILLED PER COTTONWOOD STD DETAIL 1200.
8. VALVE(S) AND BLOCKING PER MAG STD DTL 301 (MJ VALVE, TYP)

CITY OF COTTONWOOD STANDARD DETAIL	VERTICAL REALIGNMENT OF WATER MAINS	CITY ENGINEER	REVISED	DETAIL NO.
			08/18	1370

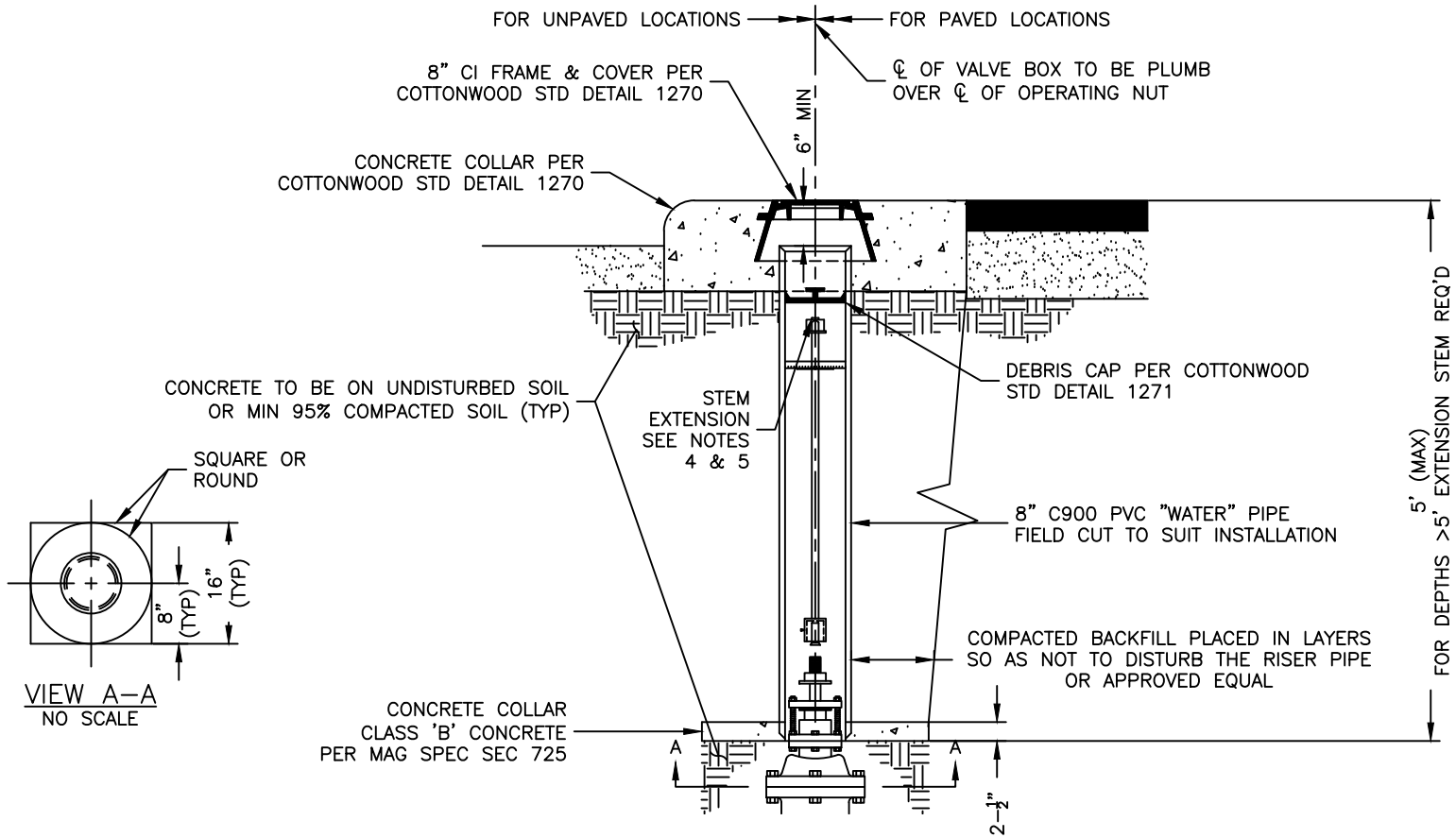

NOTES:

1. VALVE BOX SHALL BE ADJUSTED TO THE FINISHED GRADE AFTER PLACEMENT OF THE ASPHALT CONCRETE SURFACE.
2. USE TYLER #6855 VALVE BOX OR APPROVED EQUAL.
3. ALL VALVES CONNECTED TO EXISTING MAINS ARE TO BE OPERATED BY CITY OF COTTONWOOD PERSONNEL ONLY.
4. ALL STEEL FOR EXTENSION TO HAVE SHOP PRIME COAT ZINC CHROMATE, AND ONE HEAVY APPLICATION NO–OX–10 "A" IN ACCORDANCE WITH MANUFACTURER'S DIRECTION.
5. STEM EXTENSION SHALL BE TIGHTLY SECURED TO VALVE NUT.
6. VALVE BLOCKING REQUIRED PER MAG STD DETAIL 301.
7. IF TWO OR MORE JOINTS OF C900 PVC 'WATER' PIPE RISER ARE NEEDED, THEY SHALL BE COUPLED AND GLUED WITH APPROPRIATE PVC GLUE TO PERFORM A DEBRIS TIGHT JOINT.
8. U.S. MANUFACTURED IRON ONLY.

DEBRIS CAP COLOR TABLE

VALVE TYPE	COLOR
IN–LINE–RW	BLACK
HYDRANT	BLUE
BUTTERFLY	YELLOW
ZONE	RED
FIRE LINE	WHITE
EFFLUENT	PURPLE
SEWER FORCE MAIN	GREEN

CITY OF COTTONWOOD STANDARD DETAIL	VALVE BOX	CITY ENGINEER	REVISED	DETAIL NO.
			08/18	1391

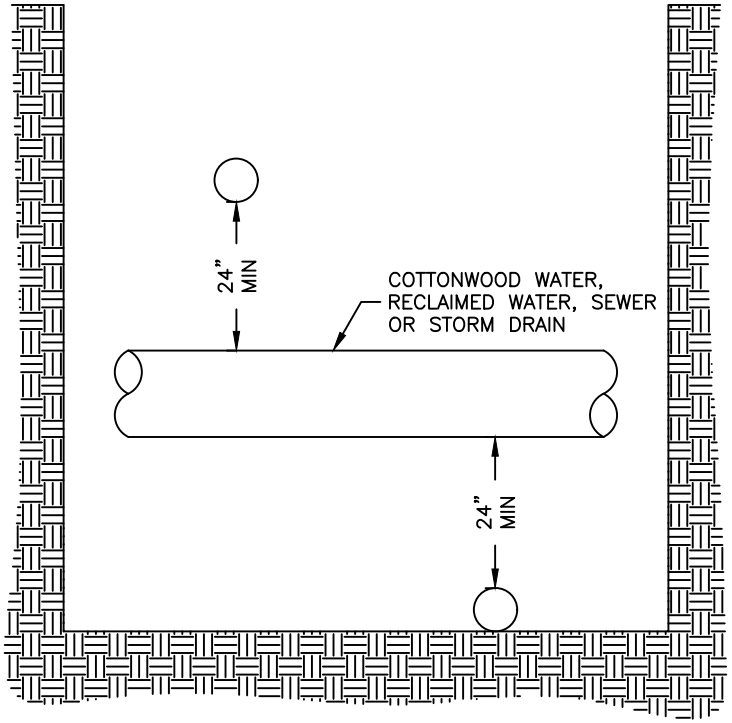

VERTICAL CLEARANCE

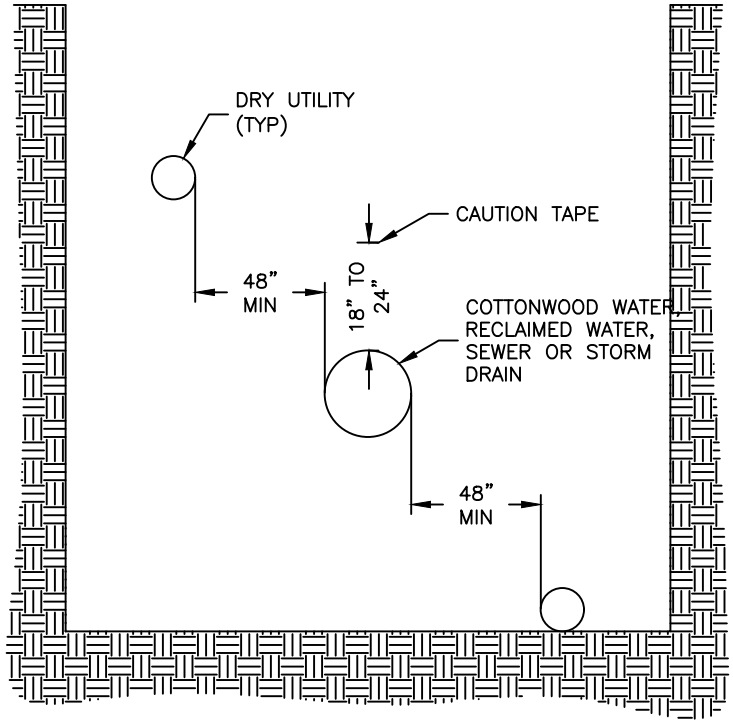

HORIZONTAL CLEARANCE

CITY OF COTTONWOOD STANDARD DETAIL	DRY UTILITY SEPARATION	CITY ENGINEER	REVISED	DETAIL NO.
			08/18	1402

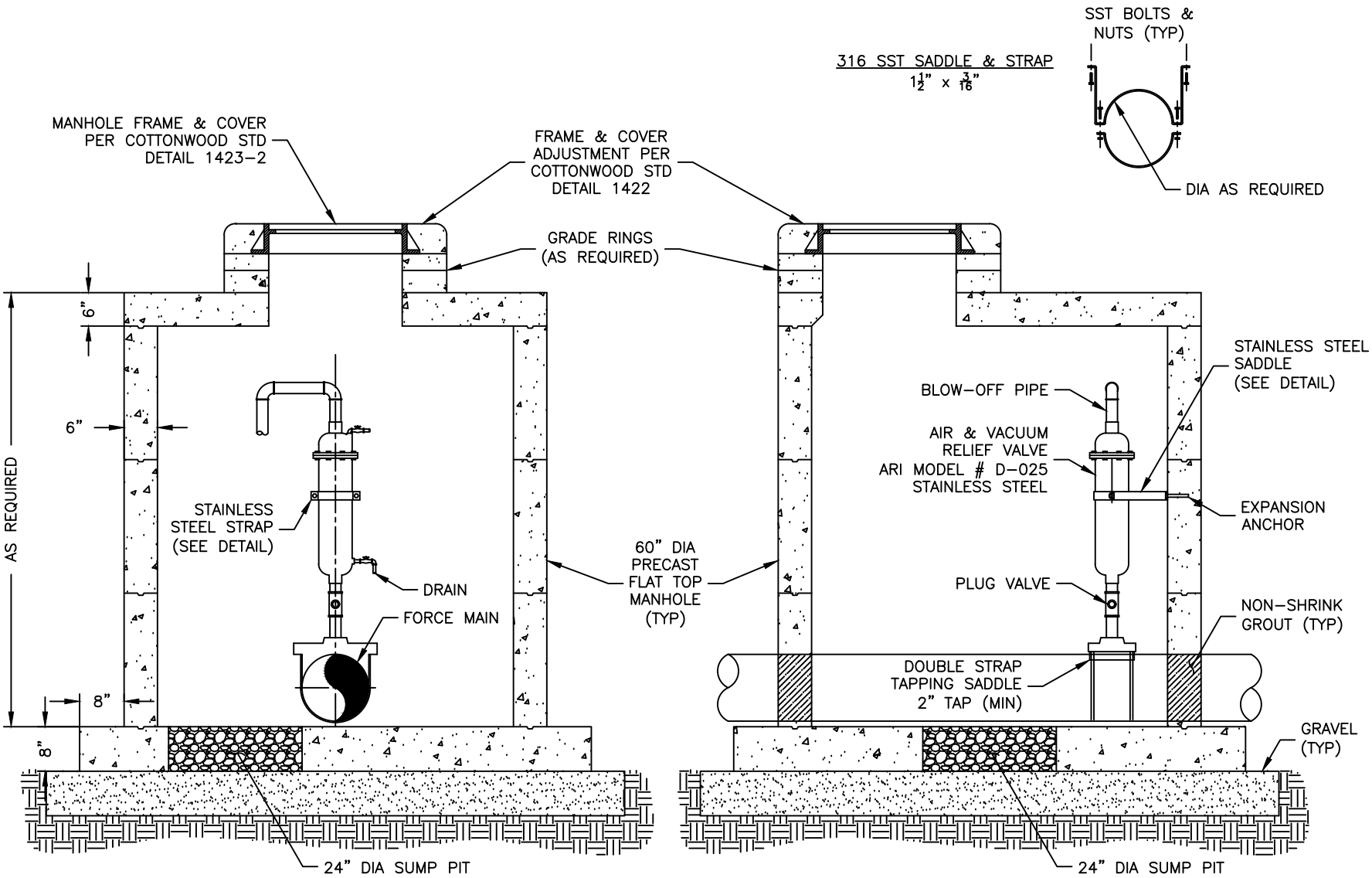

CITY OF COTTONWOOD STANDARD DETAIL	SANITARY FORCE MAIN AIR & VACUUM RELEASE VALVE	CITY ENGINEER	REVISED	DETAIL NO.
			08/18	1416

PRECAST ECCENTRIC CONE TOP MANHOLE

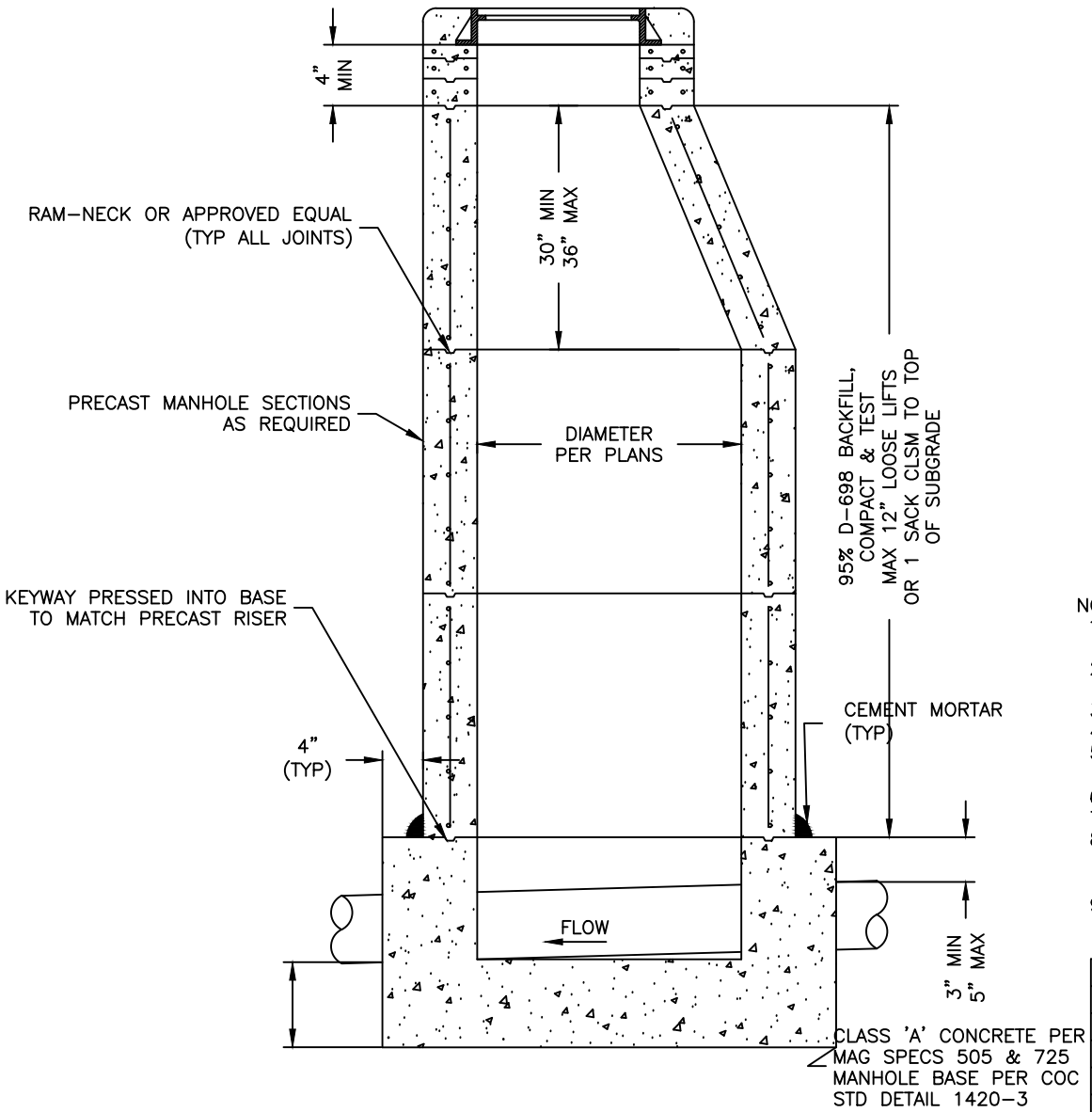

PRECAST FLAT TOP MANHOLE

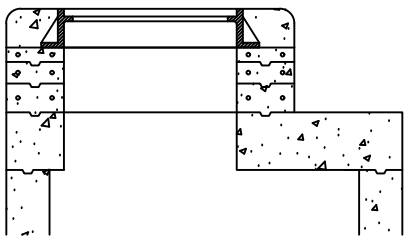

NOTES:

1. PRECAST, REINFORCED MANHOLE SECTIONS SHALL BE MANUFACTURED IN ACCORDANCE WITH ASTM C-478.
2. MANHOLE FRAME & COVER PER COTTONWOOD STD DETAILS 1422 & 1423.
3. ALL CONCRETE TO BE CURED AND PROTECTED.
4. GROUT ALL JOINTS TO SMOOTH SURFACE.
5. MANHOLES REQUIRING LINING SHALL BE LINED WITH SEWER SHIELD 150, SEWERGARD 210S OR RAVEN 405.
6. MANHOLES OVER 20' SHALL REQUIRE STRUCTURAL CALCULATIONS.
7. A MINIMUM OF ONE RISER RING SHALL BE USED.
8. CONTRACTOR SHALL VERIFY INVERT AND RIM ELEVATIONS TO ENSURE 24" MAXIMUM DISTANCE FROM CONE TO RIM WILL BE ATTAINED PRIOR TO SETTING CONE.
9. FLAT TOP SHALL ONLY BE USED IF APPROVED BY THE CITY ENGINEER.

MANHOLE INSIDE DIAMETER REQUIREMENTS

PIPE DIAMETER	DEPTH OF MAIN	MANHOLE DIA	RING & COVER
8" – 12"	UP TO 12'	4'	24" DIA
8" – 12"	12' – 20'	5'	30" DIA
15" – 18"	UP TO 20'	5'	30" DIA
*21" AND LARGER	UP TO 20'	6'	30" DIA

CITY OF COTTONWOOD STANDARD DETAIL	PRECAST CONCRETE SEWER MANHOLE	CITY ENGINEER	REVISED	DETAIL NO.
			08/18	1420-1

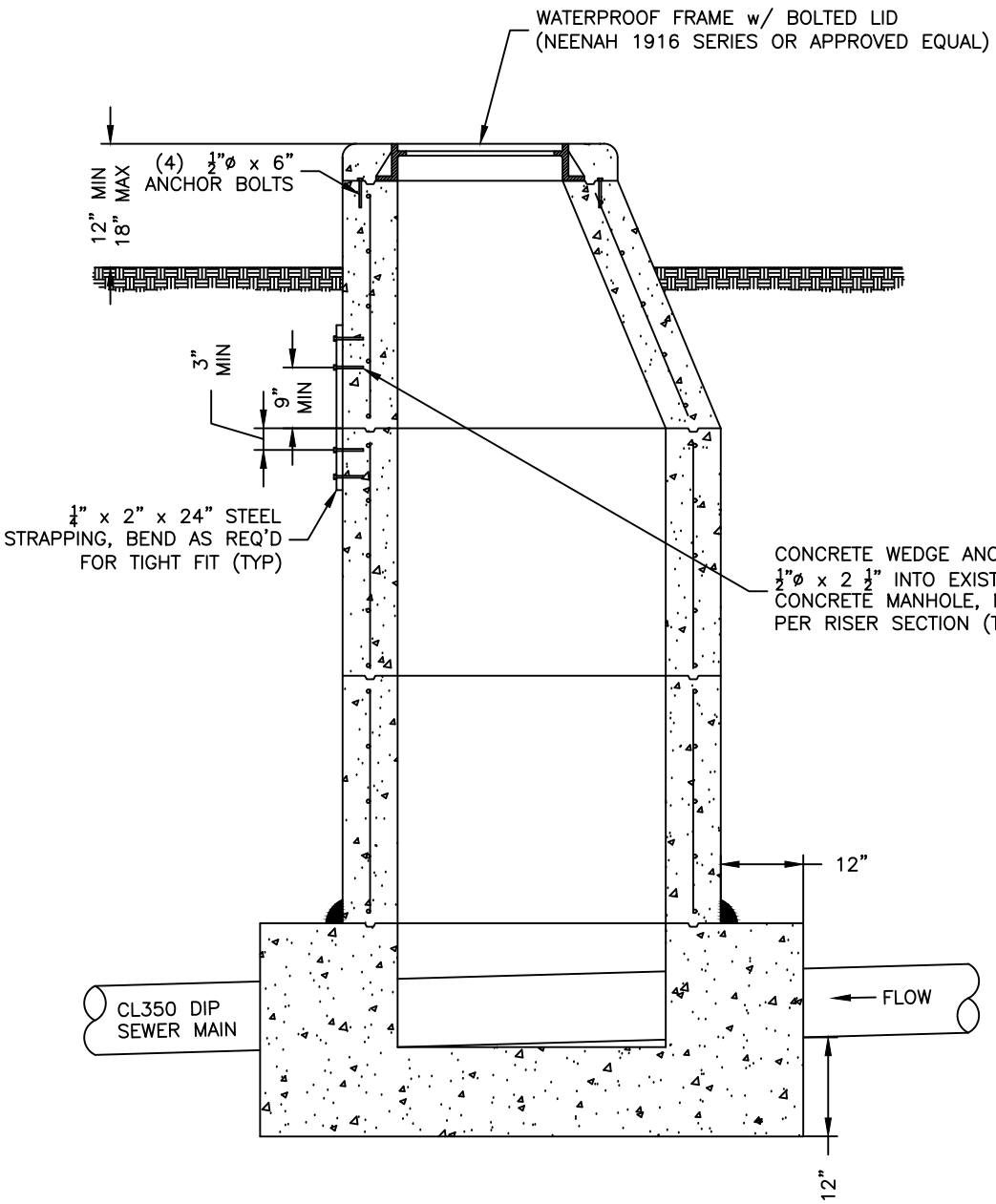

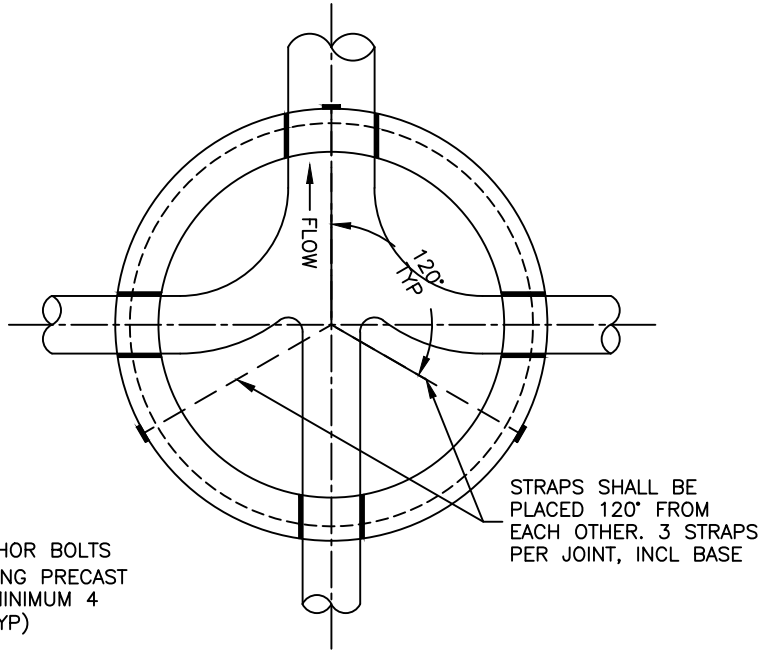

NOTES:

1. MANHOLE SHALL BE IN ACCORDANCE WITH COTTONWOOD STD DETAIL 1420–1.
2. BASE SHALL BE SIZED FOR EXTERNAL FORCE AND BOUYANCY CALCULATIONS.
3. MANHOLES REQUIRING LINING SHALL BE LINED WITH SEWER SHIELD 150, SEWERGARD 210S, OR RAVEN 405.
4. NO ADJUSTING RINGS SHALL BE USED.

CITY OF COTTONWOOD STANDARD DETAIL	INSIDE DROP MANHOLE	CITY ENGINEER	REVISED	DETAIL NO.
			08/18	1426

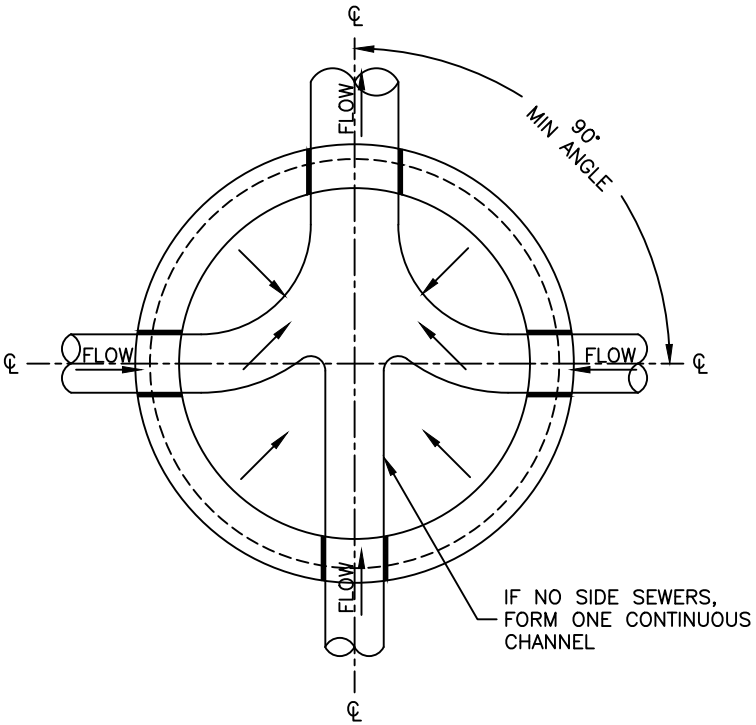

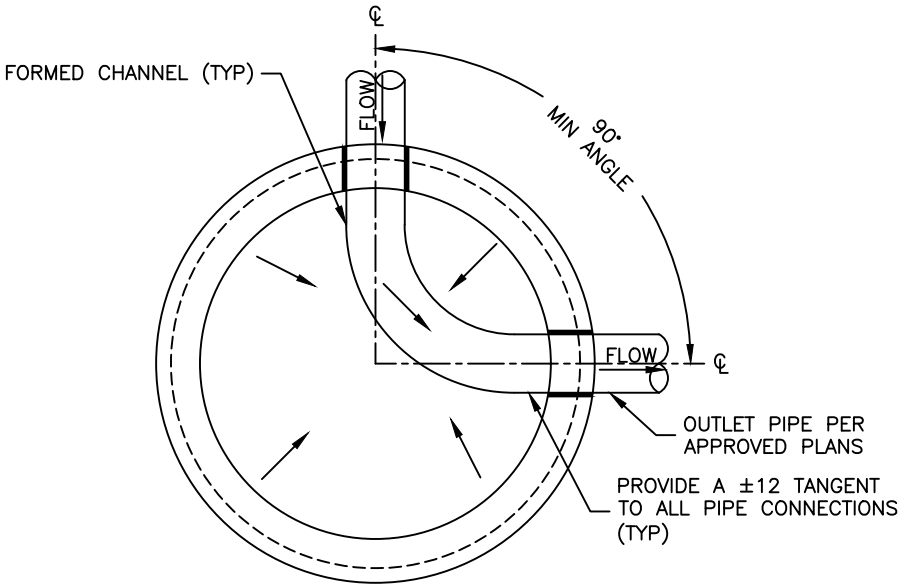

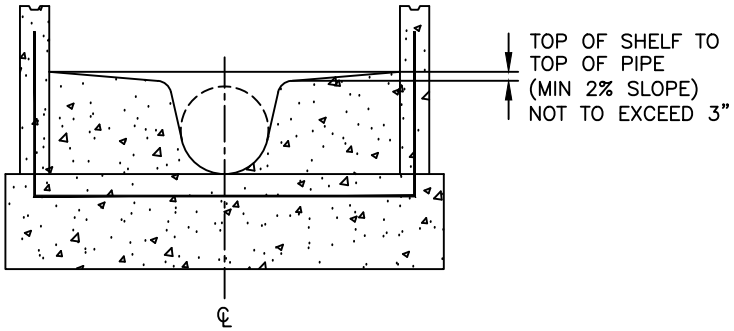

SECTION A–A

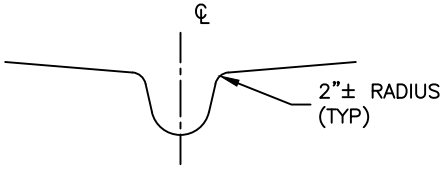

CHANNEL TRANSITION SHALL BE CONSISTENT FROM INLET TO OUTLET OF MANHOLE TO FACILITATE SMOOTH TRANSITIONS AND ACCOMMODATE CORRESPONDING MANDREL.

TYPICAL CHANNEL

CITY OF COTTONWOOD STANDARD DETAIL	CONCRETE MANHOLE BASE	CITY ENGINEER	REVISED	DETAIL NO.
			08/18	1420–3

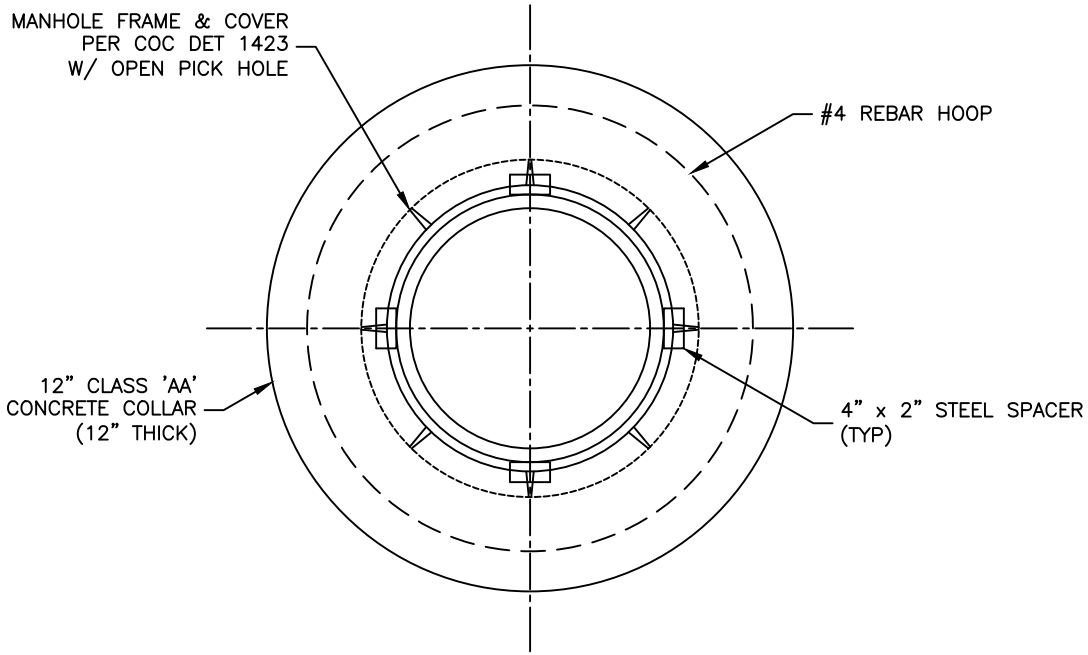

PLAN

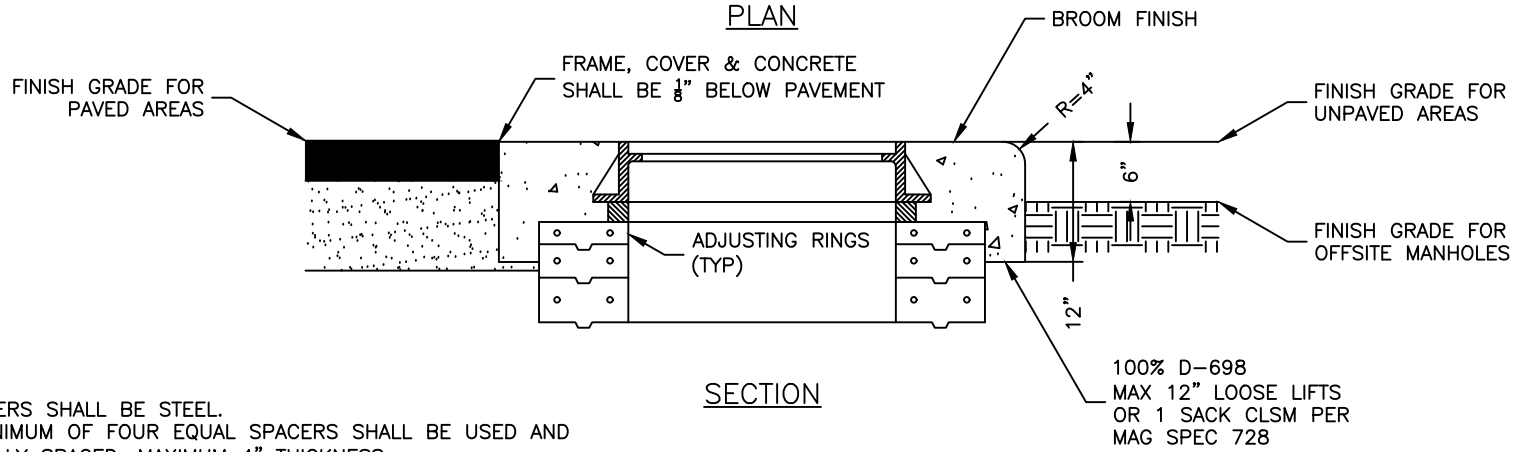

SECTION

NOTES:
1. SPACERS SHALL BE STEEL.
2. A MINIMUM OF FOUR EQUAL SPACERS SHALL BE USED AND EQUALLY SPACED, MAXIMUM 4" THICKNESS.
3. AN INTERNAL FORM SHALL BE USED TO PREVENT CONCRETE FROM FALLING INTO THE MANHOLE.
4. A MINIMUM OF ONE RISER RING SHALL BE USED.

CITY OF COTTONWOOD STANDARD DETAIL	MANHOLE FRAME ADJUSTMENT	CITY ENGINEER	REVISED	DETAIL NO.
			08/18	1422

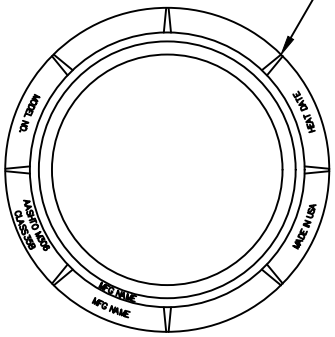

FRAME WT (CL 35) – 180 LBS

FRAME TOP VIEW

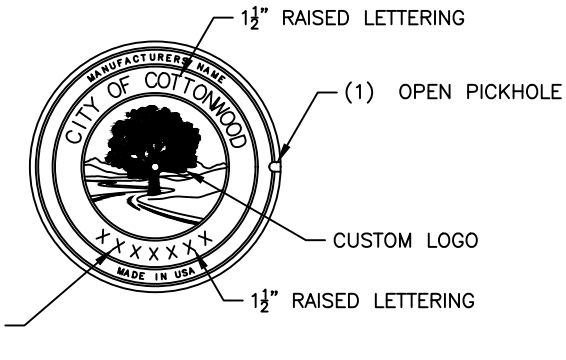

PLAN VIEW

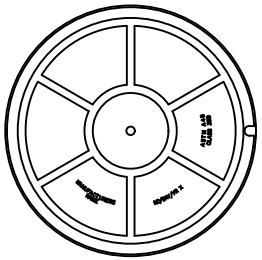

BOTTOM VIEW

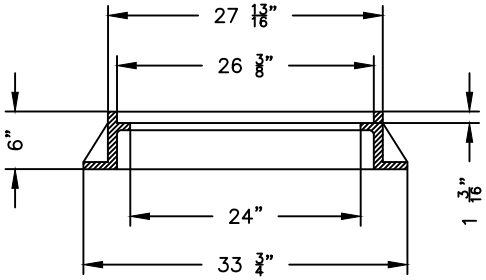

SECTION A–A

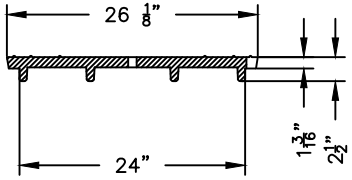

SECTION VIEW

NOTES:

1. LETTERING ON MANHOLE COVER TO CONTAIN CITY OF COTTONWOOD AND UTILITY FOR WHICH MANHOLE IS NEEDED, (I.E. "COTTONWOOD SANITARY SEWER"), OR AS DIRECTED. THE TOTAL WIDTH OF INDIVIDUAL LETTERS TO BE SUCH THAT LETTERS AND WORDS ARE EQUALLY SPACED AND BALANCED TO FORM A COMPLETE CIRCLE WITH SPACERS BEFORE AND AFTER THE WORD IDENTIFYING THE AGENCY INVOLVED. LETTERS TO BE 2" IN HEIGHT AND RAISED FLUSH W/ TOP OF COVER. TYPE OF LETTERS TO BE SUBMITTED FOR APPROVAL. WEIGHT OF CASTINGS SHALL BE NO MORE THAN 2% MORE OR LESS THAN THE APPROXIMATE WEIGHT SPECIFIED. CASTINGS SHALL CONFORM TO ASTM A–48, CLASS 35 AND AASHTO M306. THE BEARING SURFACES OF THE FRAMES AND COVERS SHALL BE MACHINED AND THE COVERS SHALL SEAT FIRMLY WITHOUT ROCKING. ALL DIMENSIONS SHALL HAVE A 1/16" TOLERANCE. U.S. MANUFACTURED IRON ONLY.

CITY OF COTTONWOOD STANDARD DETAIL	24" CAST IRON MANHOLE FRAME & COVER	CITY ENGINEER	REVISED	DETAIL NO.
			08/18	1423–1

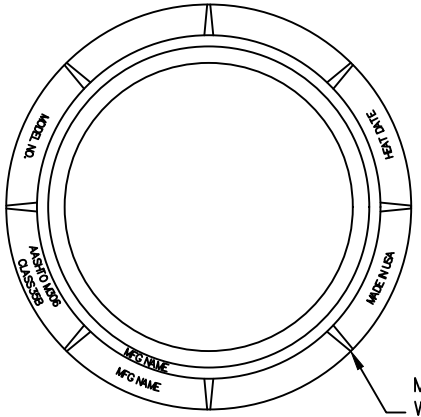

MIN 8 GUSSETS
W/ MIN TAPER
$\frac{1}{2}$" TO $\frac{3}{4}$"

FRAME WT (CL 35) – 227 LBS

FRAME TOP VIEW

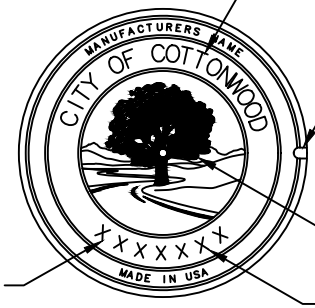

2" RAISED LETTERING

(1) OPEN PICKHOLE

CUSTOM LOGO

WATER, SANITARY
SEWER, STORM DRAIN
PER PLAN

2" RAISED LETTERING

PLAN VIEW

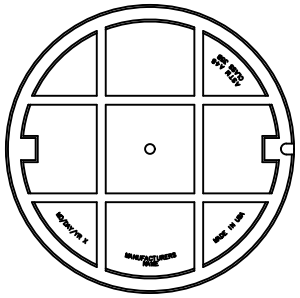

BOTTOM VIEW

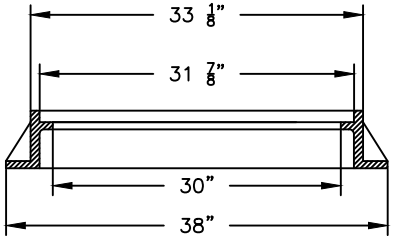

SECTION A–A

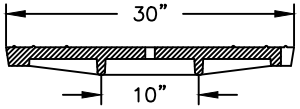

SECTION VIEW

NOTES:

1. LETTERING ON MANHOLE COVER TO CONTAIN CITY OF COTTONWOOD AND UTILITY FOR WHICH MANHOLE IS NEEDED, (I.E. "COTTONWOOD SANITARY SEWER"), OR AS DIRECTED. THE TOTAL WIDTH OF INDIVIDUAL LETTERS TO BE SUCH THAT LETTERS AND WORDS ARE EQUALLY SPACED AND BALANCED TO FORM A COMPLETE CIRCLE WITH SPACERS BEFORE AND AFTER THE WORD IDENTIFYING THE AGENCY INVOLVED. LETTERS TO BE 2" IN HEIGHT AND RAISED FLUSH W/ TOP OF COVER. TYPE OF LETTERS TO BE SUBMITTED FOR APPROVAL. WEIGHT OF CASTINGS SHALL BE NO MORE THAN 2% MORE OR LESS THAN THE APPROXIMATE WEIGHT SPECIFIED. CASTINGS SHALL CONFORM TO ASTM A–48, CLASS 35 AND AASHTO M306. THE BEARING SURFACES OF THE FRAMES AND COVERS SHALL BE MACHINED AND THE COVERS SHALL SEAT FIRMLY WITHOUT ROCKING. ALL DIMENSIONS SHALL HAVE A $\frac{1}{16}$" TOLERANCE. U.S. MANUFACTURED IRON ONLY.

CITY OF COTTONWOOD STANDARD DETAIL	30" CAST IRON MANHOLE FRAME & COVER	CITY ENGINEER	REVISED	DETAIL NO.
			08/18	1423–2

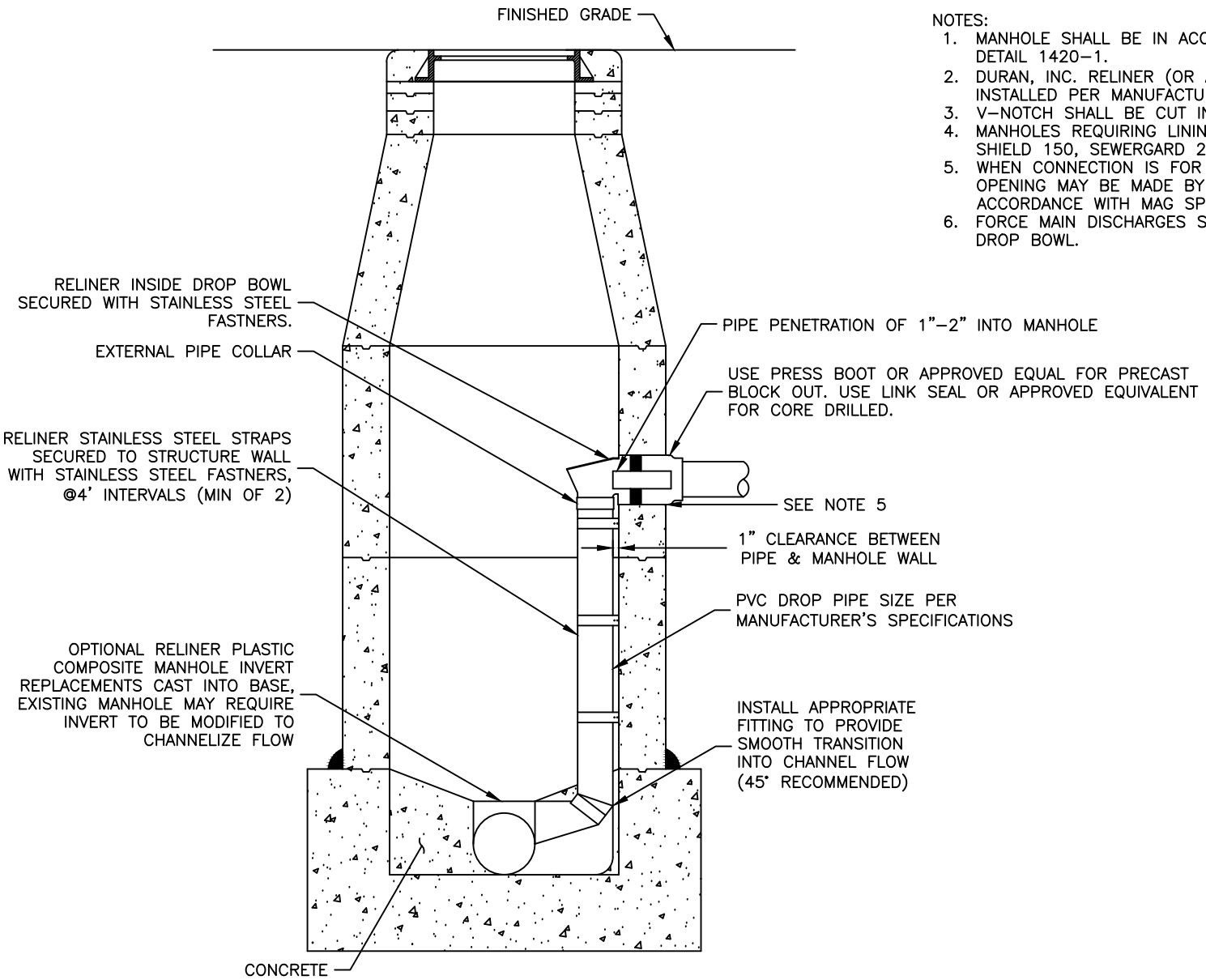

NOTES:

1. MANHOLE SHALL BE IN ACCORDANCE WITH COTTONWOOD STD DETAIL 1420–1.
2. DURAN, INC. RELINER (OR APPROVED EQUAL) SHALL BE INSTALLED PER MANUFACTURERS RECOMMENDATIONS.
3. V–NOTCH SHALL BE CUT IN INFLUENT PIPE INVERT.
4. MANHOLES REQUIRING LINING SHALL BE LINED WITH SEWER SHIELD 150, SEWERGARD 210S, OR RAVEN 405.
5. WHEN CONNECTION IS FOR AN EXISTING MAIN THE PIPE OPENING MAY BE MADE BY CORE DRILLING MANHOLE IN ACCORDANCE WITH MAG SPECIFICATION SECTION 625.3.
6. FORCE MAIN DISCHARGES SHALL REQUIRE A HOOD ON THE DROP BOWL.

CITY OF COTTONWOOD STANDARD DETAIL	INSIDE DROP MANHOLE	CITY ENGINEER	REVISED	DETAIL NO.
			08/18	1426

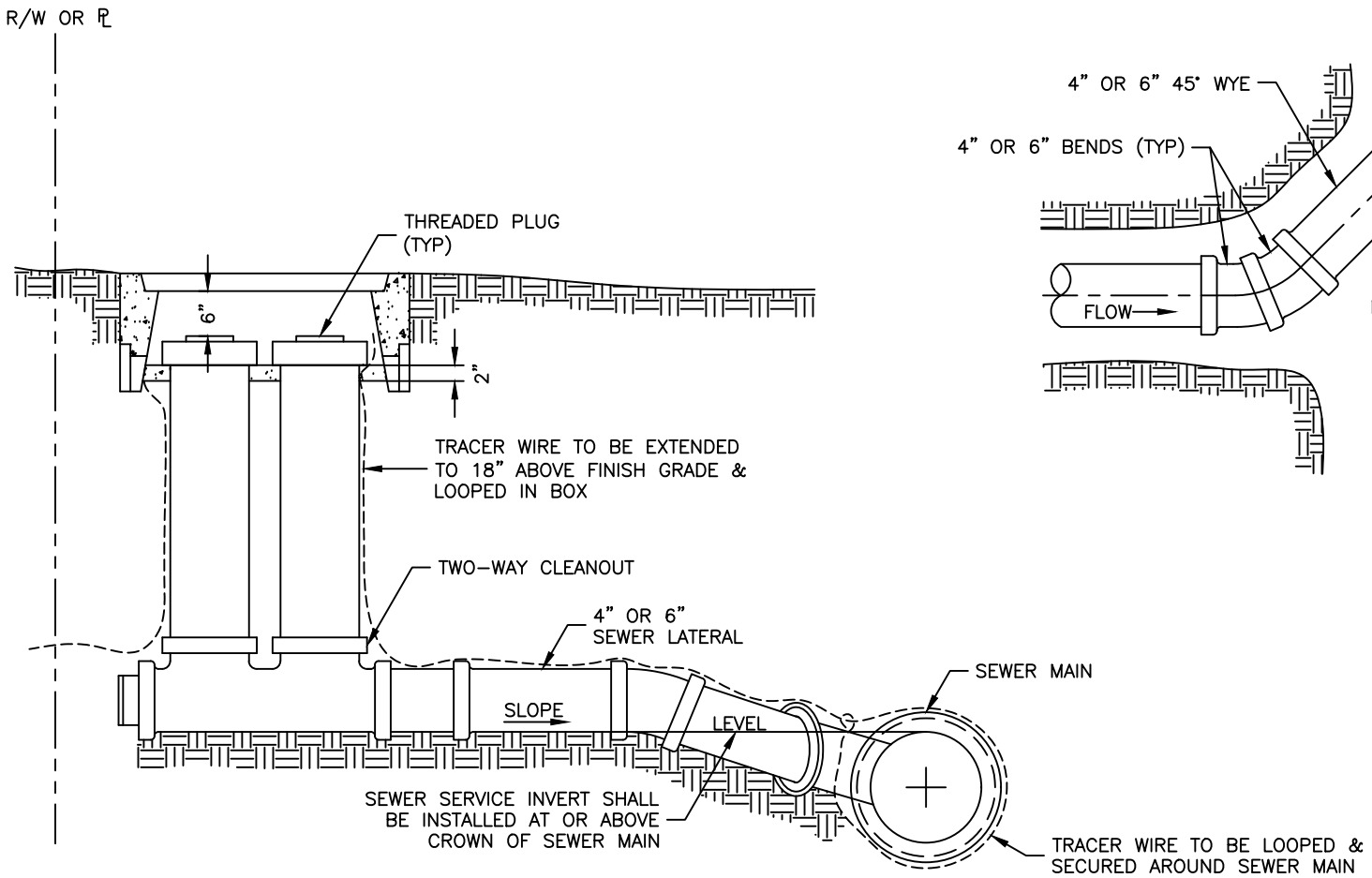

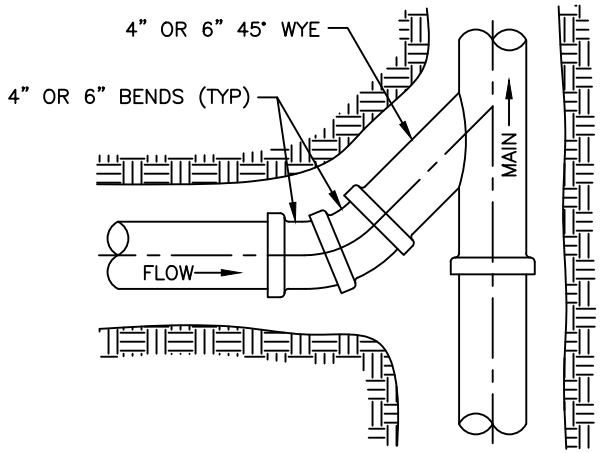

NOTES:

1. SERVICE LATERAL EXTENDS TO PROPERTY LINE OR TO EASEMENT LINE.
2. SIZE OF TAP AND SERVICE LATERAL SHALL BE DESIGNATED ON PLANS.
3. CONSTRUCT SERVICE LATERAL AT MINIMUM SLOPE OF $\frac{1}{4}$" PER FOOT.
4. IF DEPTH REQUIRES, MINIMUM SLOPE CAN BE REDUCED TO $\frac{1}{8}$" PER FOOT PROVIDED SERVICE LATERAL IS SURVEYED AND STAKED.
5. CONTRACTOR SHALL USE THE APPROPRIATE FITTINGS TO ENSURE NO MISALIGNMENT OF PIPE AND NO JOINT DEFLECTION.
6. END OF SERVICE LATERAL SHALL BE SEALED.
7. FOR CLEANOUTS LESS THAN 24" DEEP, REFER TO COC STD DETAIL 1440-2.
8. FOR INSTALLATION OF A TAP TO AN EXISTING MAIN, A SADDLE TEE SHALL BE USED IN LIEU OF A WYE FITTING. TAPS SHALL BE PERFORMED BY CITY OF COTTONWOOD PERSONNEL ONLY.
9. PLACE CONCRETE AROUND PIPE INSIDE FRAME OR METER BOX.
10. ON DOUBLE BARREL TWO-WAY CLEANOUT, IF HORIZONTAL SPACING ALLOWS, CONTRACTOR SHALL INSTALL FRAMES & COVERS, IF FRAMES & COVERS ARE NOT USED, A MAG #2 METER BOX (MINIMUM) SHALL BE USED. STAMP OR WELD A 2" TALL LETTER "S" ON LID OF METER BOX.

CITY OF COTTONWOOD STANDARD DETAIL	SEWER SERVICE LATERAL GREATER THAN 2 FEET DEEP	CITY ENGINEER	REVISED	DETAIL NO.
			08/18	1440-1

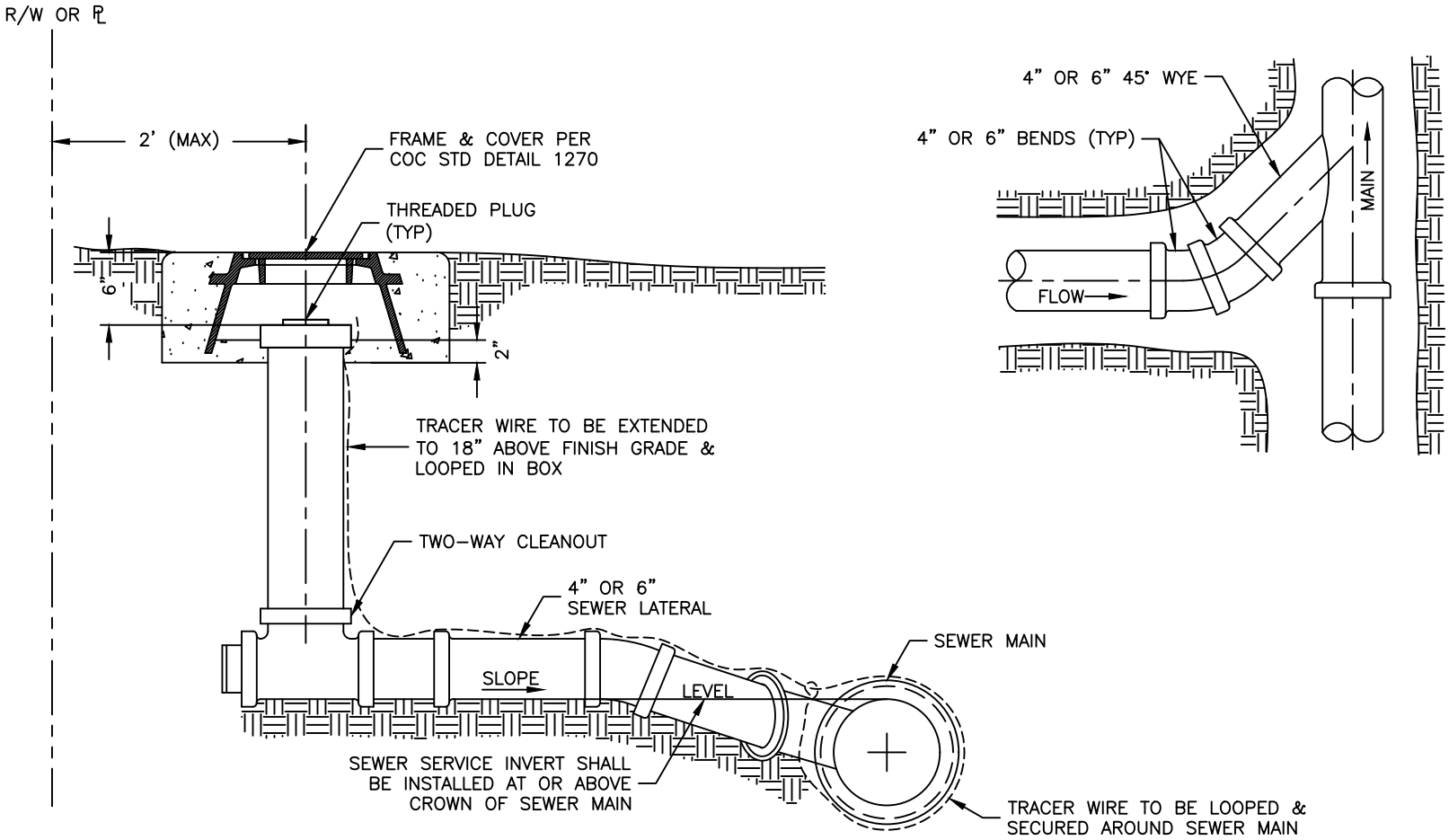

NOTES:

1. SERVICE LATERAL EXTENDS TO PROPERTY LINE OR TO EASEMENT LINE.
2. SIZE OF TAP AND SERVICE LATERAL SHALL BE DESIGNATED ON PLANS.
3. CONSTRUCT SERVICE LATERAL AT MINIMUM SLOPE OF $\frac{1}{4}$" PER FOOT.
4. IF DEPTH REQUIRES, MINIMUM SLOPE CAN BE REDUCED TO $\frac{1}{8}$" PER FOOT PROVIDED SERVICE LATERAL IS SURVEYED AND STAKED TO GRADE.
5. CONTRACTOR SHALL USE THE APPROPRIATE FITTINGS TO ENSURE NO MISALIGNMENT OF PIPE AND NO JOINT DEFLECTION.
6. END OF SERVICE LATERAL TO BE SEALED.
7. FOR CLEANOUTS DEEPER THAN 24", REFER TO COC STD DETAIL 1440-1.
8. FOR INSTALLATION OF A TAP TO AN EXISTING MAIN, A SADDLE TEE SHALL BE USED IN LIEU OF A WYE FITTING. TAP SHALL BE PERFORMED BY CITY OF COTTONWOOD PERSONNEL ONLY.
9. PLACE CONCRETE AROUND PIPE INSIDE FRAME & COVER.

CITY OF COTTONWOOD STANDARD DETAIL	SEWER SERVICE LATERAL 2 FEET DEEP OR LESS	CITY ENGINEER	REVISED	DETAIL NO.
			08/18	1440-2

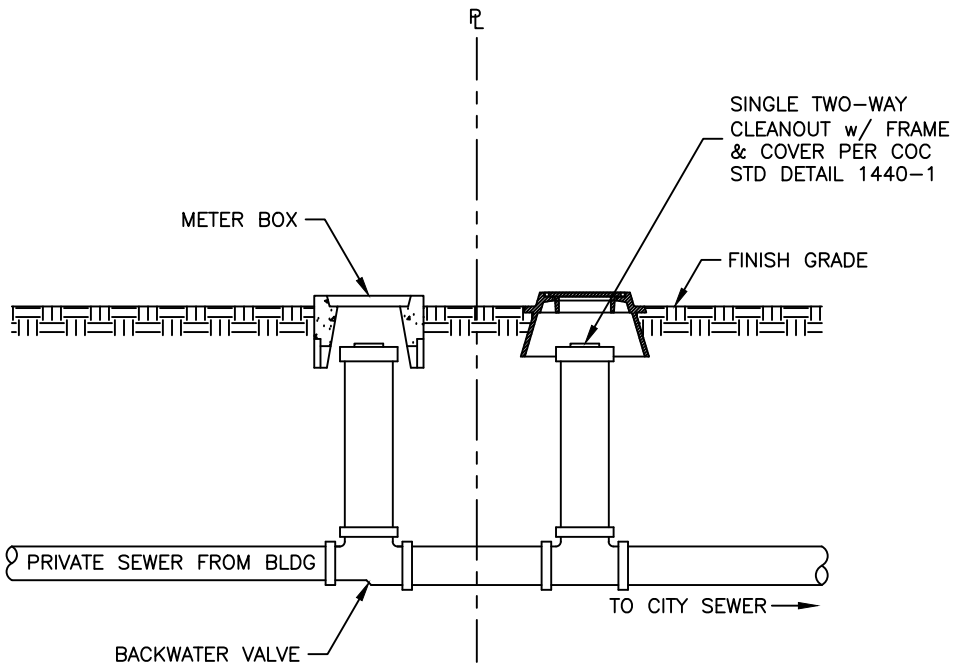

DEPTH OF BURY: 24" AND LESS

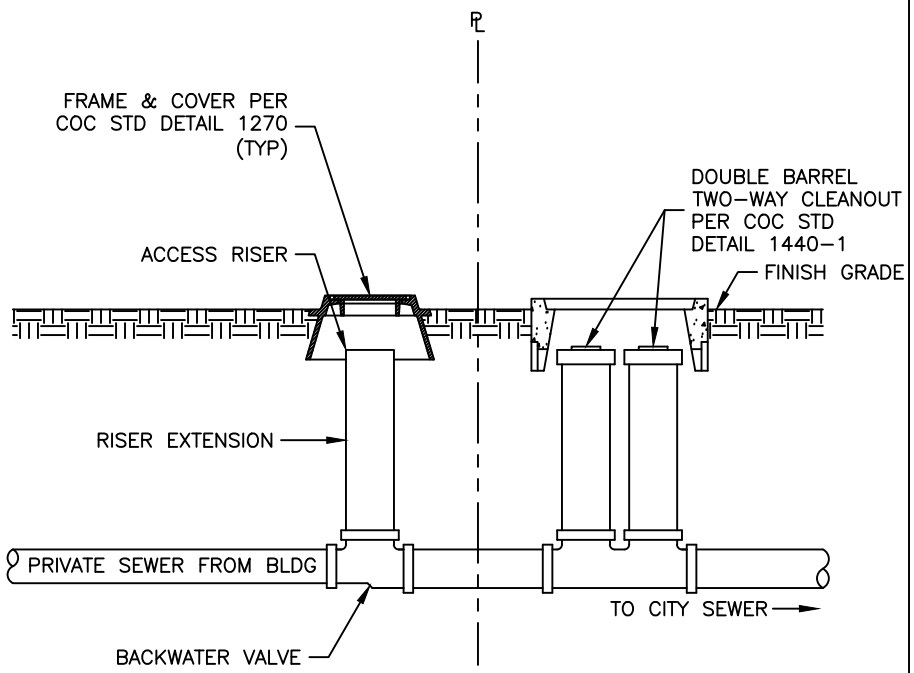

DEPTH OF BURY: GREATER THAN 24"

NOTES:
1. BACKWATER VALVE SHALL BE LOCATED BETWEEN THE BUILDING CLEANOUT AND PROPERTY LINE.
2. AN EXTENDABLE TYPE BACKWATER VALVE SHALL BE INSTALLED WHEN VALVES ARE DEEPER THAN 24".
3. ON DOUBLE BARREL TWO-WAY CLEANOUT, IF HORIZONTAL SPACING ALLOWS, CONTRACTOR SHALL INSTALL FRAMES AND COVERS, IF FRAMES AND COVERS ARE NOT USED, A MINIMUM OF A MAG #2 METER BOX SHALL BE USED. STAMP OR WELD A 2" TALL LETTER "S" ON THE LID OF THE METER BOX.

CITY OF COTTONWOOD STANDARD DETAIL	BACKWATER VALVE	CITY ENGINEER	REVISED	DETAIL NO.
			08/18	1440-3

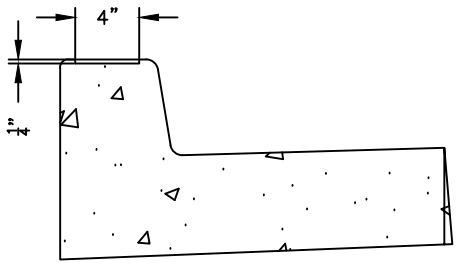

SECTION A–A

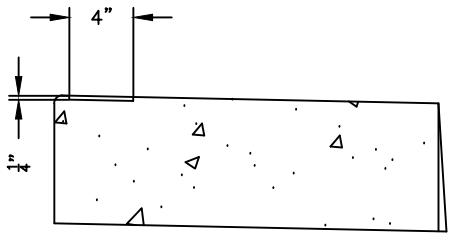

SECTION A–A

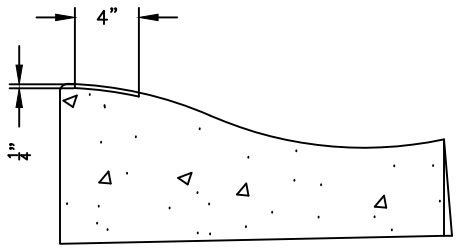

SECTION A–A

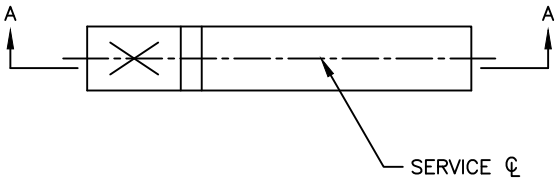

CURB STAMP TYPE 'A'
VERTICAL CURB & GUTTER

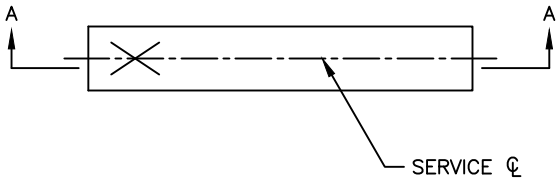

CURB STAMP TYPE 'B'
RIBBON CURB

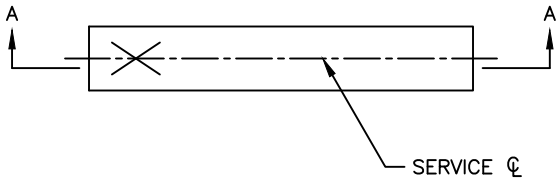

CURB STAMP TYPE 'C' OR 'D'
ROLL CURB & GUTTER

NOTES:
1. STAMP TOP OF CURB WITH 4" TALL BY 1/4" DEEP "W" OR "S" TO DESIGNATE SERVICE LINE CROSSING.

CITY OF COTTONWOOD STANDARD DETAIL	WATER & SEWER SERVICE CURB CROSSING STAMP DETAIL	CITY ENGINEER	REVISED	DETAIL NO.
			08/18	1440–4

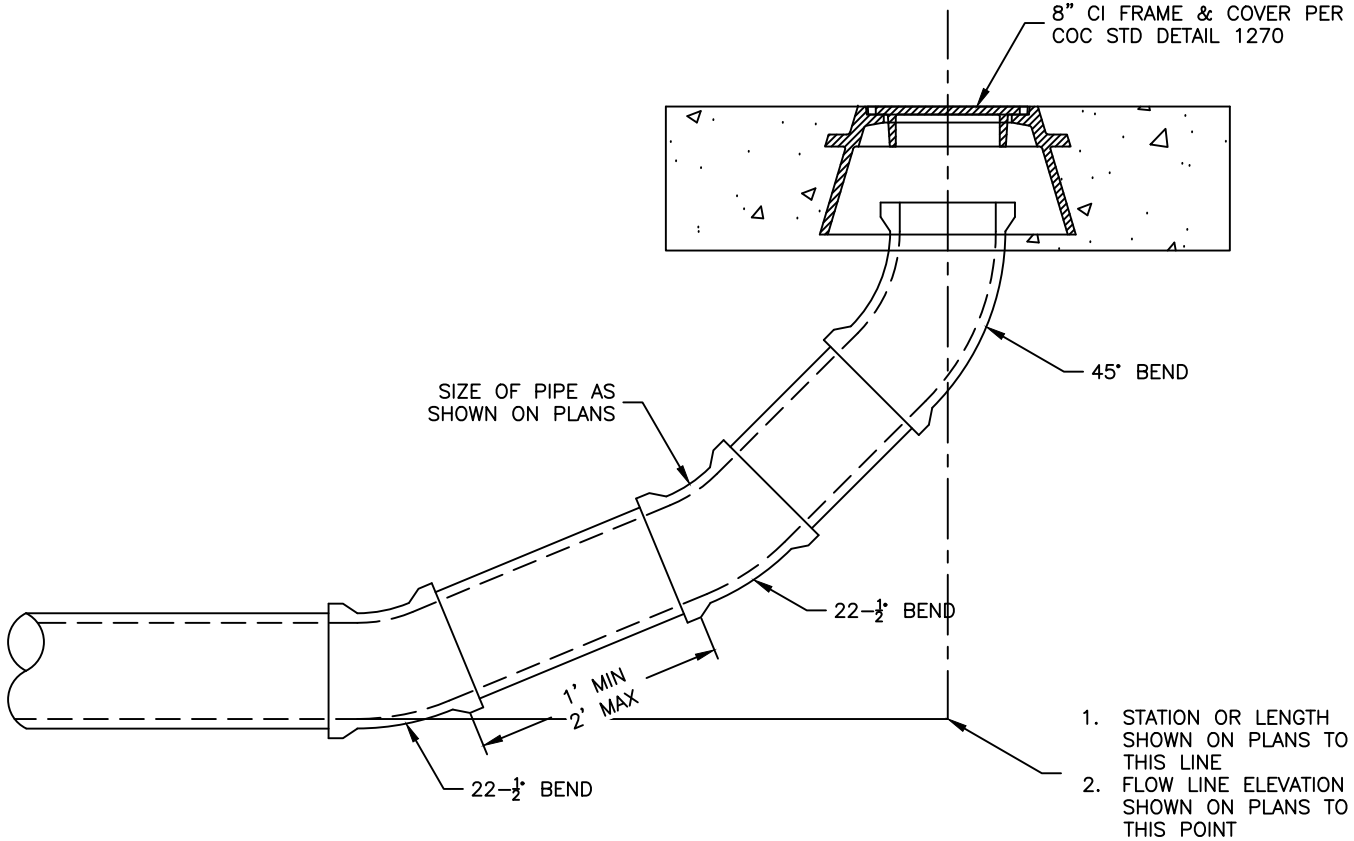

NOTES:

1. NO SERVICE TAPS SHALL BE LOCATED CLOSER THAN 4 FEET DOWNSTREAM OF FIRST BEND.
2. ALL JOINTS ARE TO BE WATER TIGHT.
3. CLEANOUTS SHALL NOT BE PLACED IN VALLEY GUTTERS, SPANDRELS, CURB & GUTTERS, CATCH BASINS, OR OTHER DRAINAGE STRUCTURES.
4. CLEANOUTS INSTALLED OFFSITE REQUIRE CARSONITE MARKERS RUNNING PARALLEL TO THE LINE, AS DIRECTED BY THE ENGINEER.
5. BEDDING AND SHADING SHALL BE PER COTTONWOOD STANDARD DETAIL 1200.
6. PLACE CONCRETE AROUND 45° BEND INSIDE FRAME & COVER.

CITY OF COTTONWOOD STANDARD DETAIL	SEWER MAIN CLEANOUT	CITY ENGINEER	REVISED	DETAIL NO.
			08/18	1441

RECLAIMED WATER
DO NOT DRINK
NO TOMAR

IDENTIFICATION TAG:

3" x 8" x $\frac{3}{16}$" PURPLE POLYETHYLENE PLASTIC WITH MINIMUM $\frac{1}{2}$" HIGH BLACK LETTERING IN ACCORDANCE WITH MAG SPEC SEC 616. TAG TO BE ATTACHED TO METER AND VALVE WITH STAINLESS STEEL WIRE.

IDENTIFICATION DECAL:

5" x 16" x $\frac{3}{16}$" PURPLE POLYETHYLENE PLASTIC WITH MINIMUM 1" HIGH BLACK LETTERING IN ACCORDANCE WITH MAG SPEC SEC 616. DECAL TO BE ATTACHED WITH AN EPOXY ADHESIVE.

CITY OF COTTONWOOD STANDARD DETAIL	LARGE RECLAIMED WATER IDENTIFICATION TAG & DECAL	CITY ENGINEER	REVISED	DETAIL NO.
			08/18	1501-1

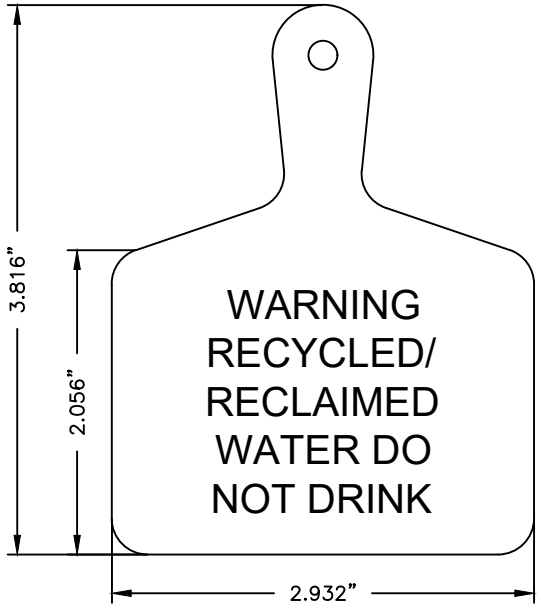

FRONT

BACK

IDENTIFICATION TAG:

IN ACCORDANCE WITH CHRISTY'S SPECIFICATIONS, "PURPLE RECYCLED/RECLAIMED WATER – ENGLISH/SPANISH – 2 SIDED MAXI TAG (PART No. ID.MAX.P2.RC006)" OR APPROVED EQUAL. TAG TO BE ATTACHED TO METER & VALVE WITH STAINLESS STEEL WIRE.

CITY OF COTTONWOOD STANDARD DETAIL	SMALL RECLAIMED WATER IDENTIFICATION TAG	CITY ENGINEER	REVISED	DETAIL NO.
			08/18	1501–2

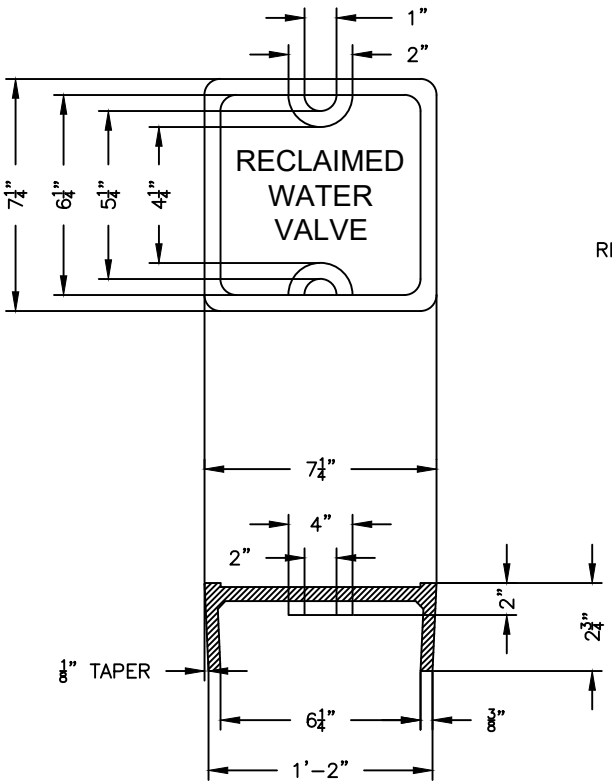

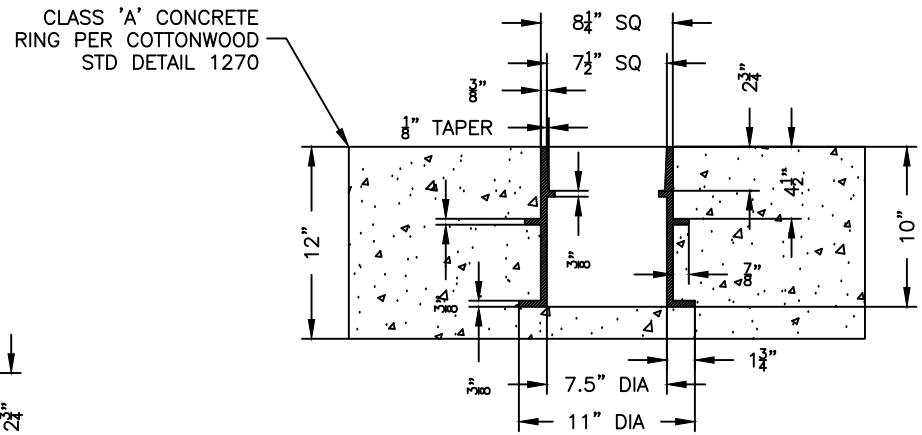

NOTES:

1. ROUND BOTTOM FOR RISER PIPE, SQUARE TOP COVER.
2. ALL MATERIAL SHALL BE CAST IRON PER ASTM A48, CLASS 30B.
3. U.S. MANUFACTURED IRON ONLY.
4. RECLAIMED WATER VALVE BOX TO BE INSTALLED PER COTTONWOOD STD DETAIL 1270.
5. THE CAST IRON LID SHALL BE MARKED "RECLAIMED WATER VALVE" ON THE TOP SIDE. LETTERS SHALL BE 1" EACH AND RAISED 1/8".
6. THE LID, INSIDE AND OUTSIDE OF THE RISER PIPE SHALL BE PAINTED RECLAIMED PURPLE (PANTONE No. 512). A PURPLE LOCKING DEBRIS CAP SHALL BE INSTALLED PER COTTONWOOD STD DETAIL 1271. THE DEBRIS CAP SHALL HAVE A VALVE TAG PER COTTONWOOD STD DETAIL 1501.

CITY OF COTTONWOOD STANDARD DETAIL	RECLAIMED WATER VALVE BOX & COVER	CITY ENGINEER	REVISED	DETAIL NO.
			08/18	1502

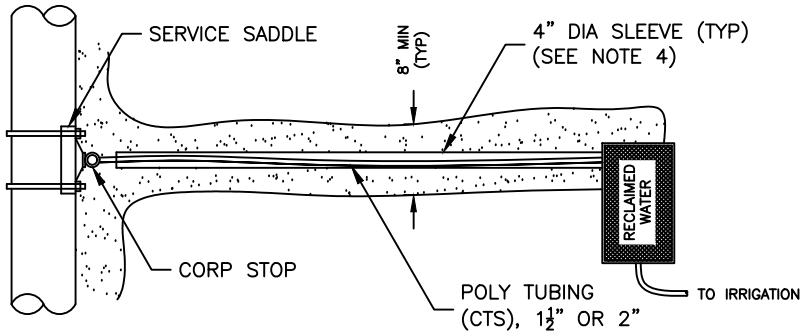

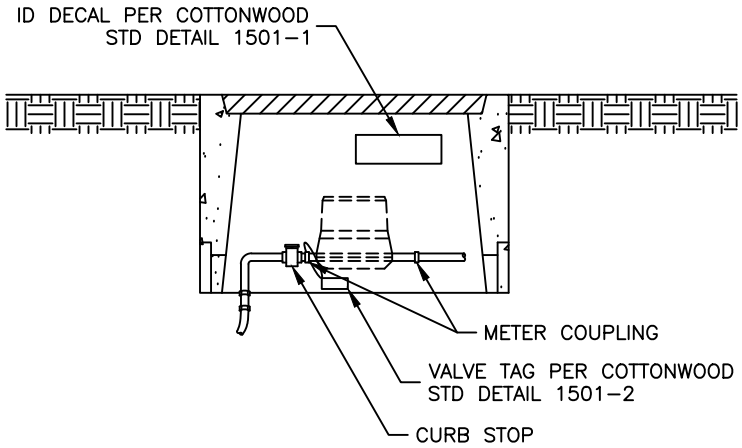

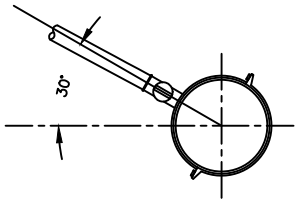

NOTES:

1. ALL FITTINGS SHALL BE BRASS OR POLY TUBING (CTS), AND SHALL BE CONTINUOUS BETWEEN THE RECLAIMED WATER MAIN AND RECLAIMED WATER METER. POLY TUBING SHALL BE PURPLE IN COLOR.
2. NEW RECLAIMED WATER SERVICE TAPS SHALL BE INSTALLED USING AN ALL-BRONZE DOUBLE-STRAP TAPPING SADDLE.
3. A MINIMUM OF 30" OF COVER SHALL BE PROVIDED FOR RECLAIMED WATER SERVICES.
4. RECLAIMED WATER SERVICES SHALL BE SLEEVED BENEATH ROADWAYS VIA A 4" PVC SLEEVE (SCH 80). SLEEVE SHALL BE WRAPPED w/ PURPLE POLYETHYLENE TAPE.
5. RECLAIMED WATER SERVICE INCLUDES THE CORP STOP, SERVICE PIPE, PVC SLEEVE, APPURTENANT FITTINGS, CURB STOP, METER BOX AND COVER.
6. ALL RECLAIMED WATER METERS WILL BE INSTALLED BY THE CITY OF COTTONWOOD UTILITIES DEPT.

CITY OF COTTONWOOD STANDARD DETAIL	RECLAIMED WATER SERVICE CONNECTION	CITY ENGINEER	REVISED	DETAIL NO.
			08/18	1503

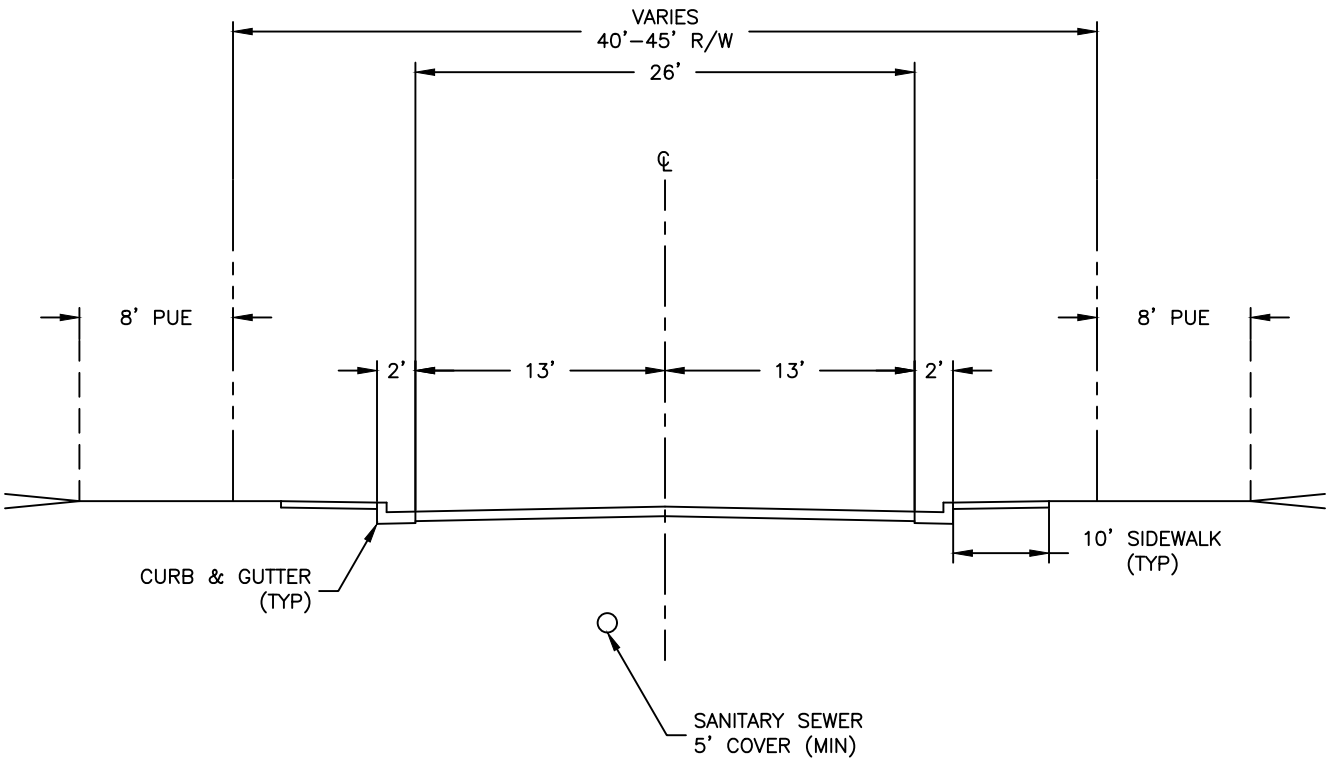

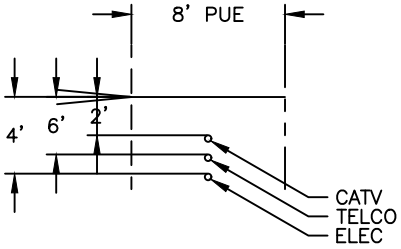

SOUTH/EAST

DESIGN SPEED = 30 MPH
POSTED SPEED = 25 MPH

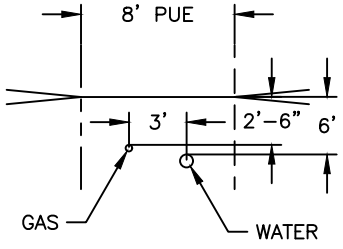

NORTH/WEST

NOTES:
1. MINIMUM 3" AC OVER 6" ABC PAVEMENT STRUCTURE OR PER APPROVED PAVEMENT DESIGN REPORT, WHICHEVER IS GREATER.

CITY OF COTTONWOOD STANDARD DETAIL	LOCAL STREET	CITY ENGINEER	REVISED	DETAIL NO.
			08/18	1601

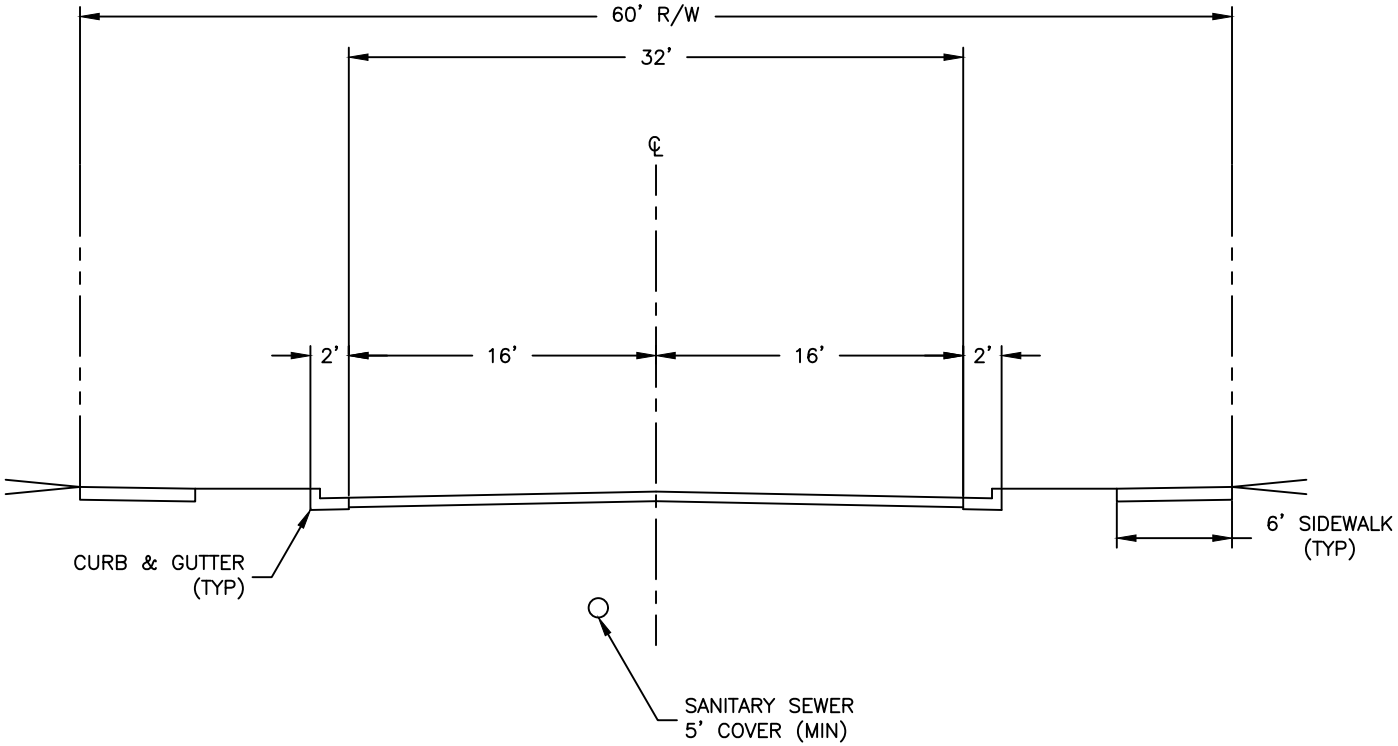

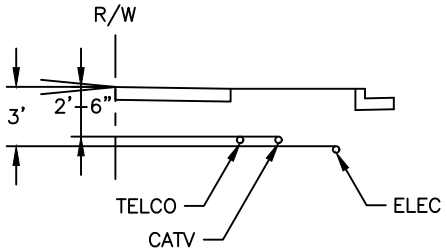

SOUTH/EAST

DESIGN SPEED = 35 MPH
POSTED SPEED = 30 MPH

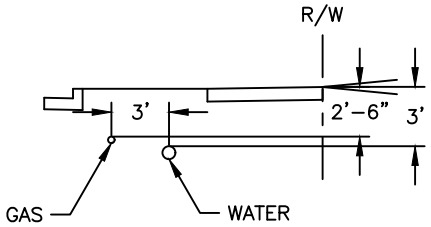

NORTH/WEST

NOTES:

1. 'NO PARKING' SIGNS SHALL BE PLACED ALONG BOTH SIDES OF THE STREET.
2. VERTICAL CURB SHALL BE USED AT CURB RETURNS, ADJACENT TO COMMON AREAS, AND OTHER AREAS TO RESTRICT VEHICLE ACCESS.
3. ROLLED CURB MAY BE USED ADJACENT TO RESIDENTIAL LOTS.
4. SIX INCH HIGH ROLLED CURB, COTTONWOOD STANDARD DETAIL 1220, MAY BE USED TO INCREASE STREET DRAINAGE CAPACITY.
5. MINIMUM 4" AC OVER 6" ABC PAVEMENT STRUCTURE OR PER APPROVED PAVEMENT DESIGN REPORT, WHICHEVER IS GREATER.

CITY OF COTTONWOOD STANDARD DETAIL	2 LANE COLLECTOR	CITY ENGINEER	REVISED	DETAIL NO.
			08/18	1602

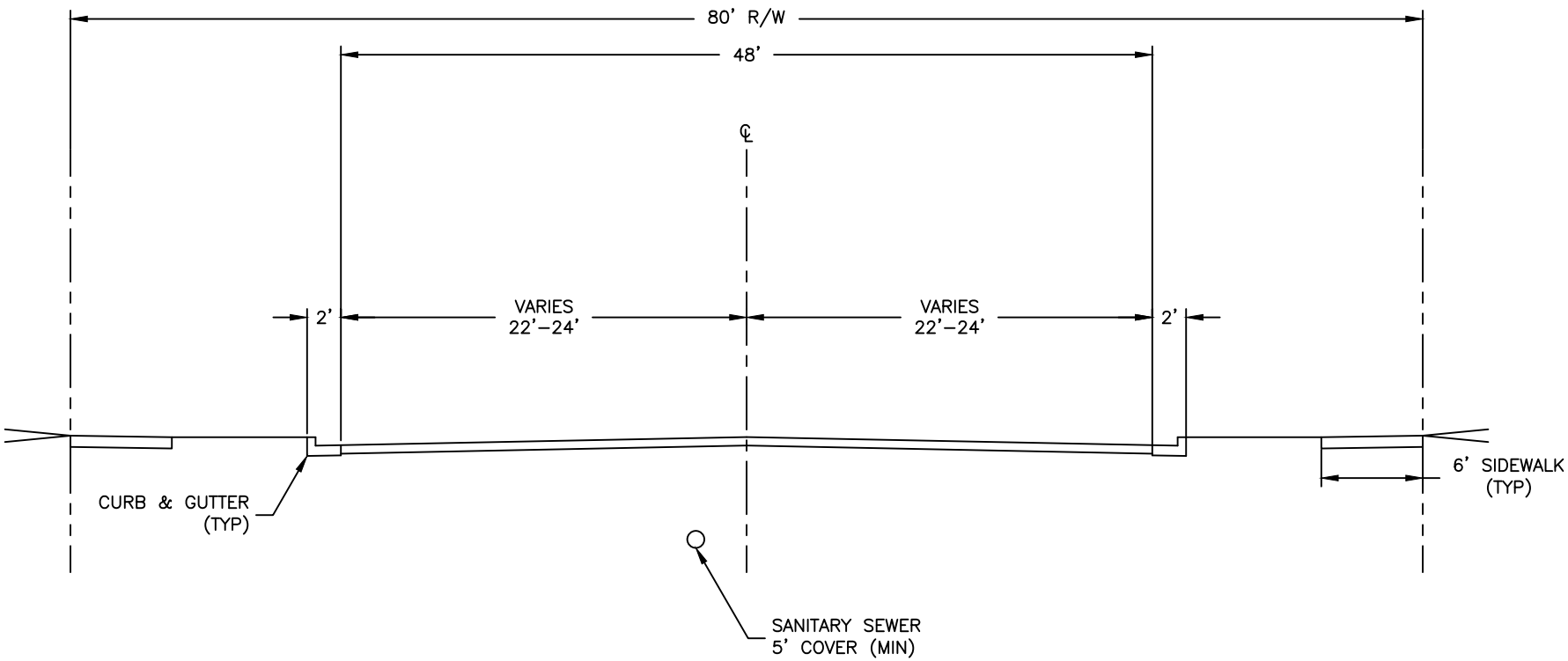

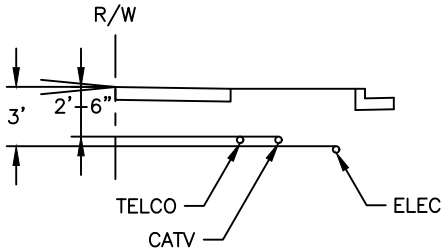

SOUTH/EAST

DESIGN SPEED = 35 MPH
POSTED SPEED = 30 MPH

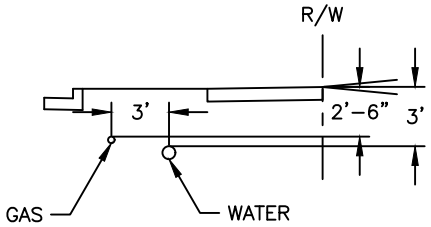

NORTH/WEST

NOTES:
1. 'NO PARKING' SIGNS SHALL BE PLACED ALONG BOTH SIDES OF THE STREET.
2. MINIMUM 5" AC OVER 8" ABC PAVEMENT STRUCTURE OR PER APPROVED PAVEMENT DESIGN REPORT, WHICHEVER IS GREATER.

CITY OF COTTONWOOD STANDARD DETAIL	3–4 LANE COLLECTOR	CITY ENGINEER	REVISED	DETAIL NO.
			08/18	1603

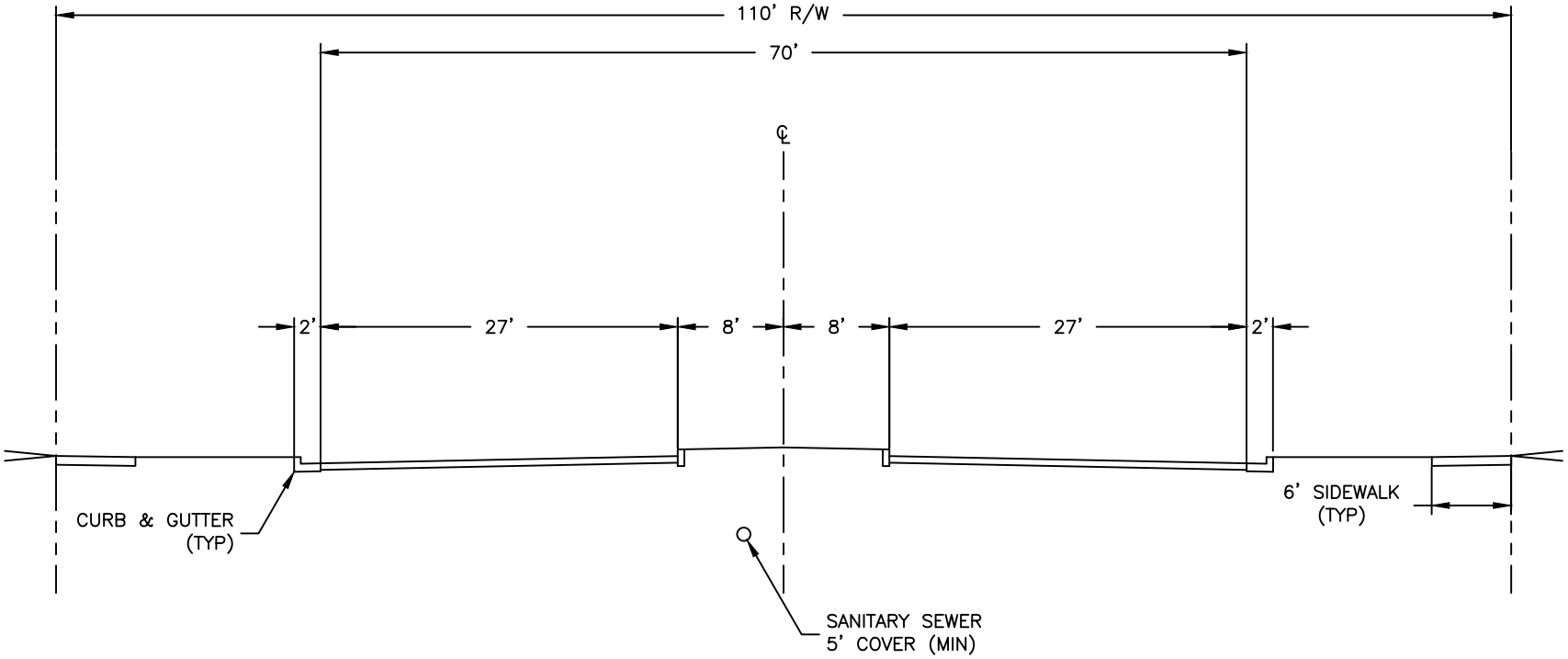

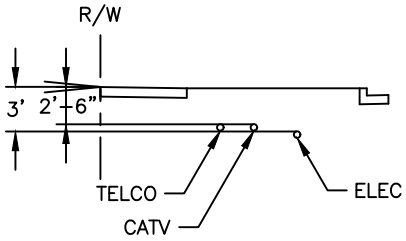

SOUTH/EAST

DESIGN SPEED = 50 MPH
POSTED SPEED = 40 MPH

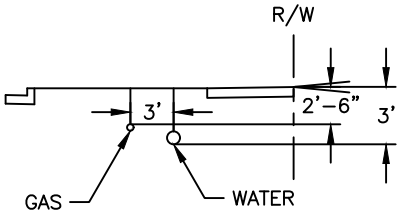

NORTH/WEST

NOTES:
1. 'NO PARKING' SIGNS SHALL BE PLACED ALONG BOTH SIDES OF THE STREET.
2. MINIMUM 6" AC OVER 10" ABC PAVEMENT STRUCTURE OR PER APPROVED PAVEMENT DESIGN REPORT, WHICHEVER IS GREATER.

CITY OF COTTONWOOD STANDARD DETAIL	4-5 LANE ARTERIAL	CITY ENGINEER	REVISED	DETAIL NO.
			08/18	1604

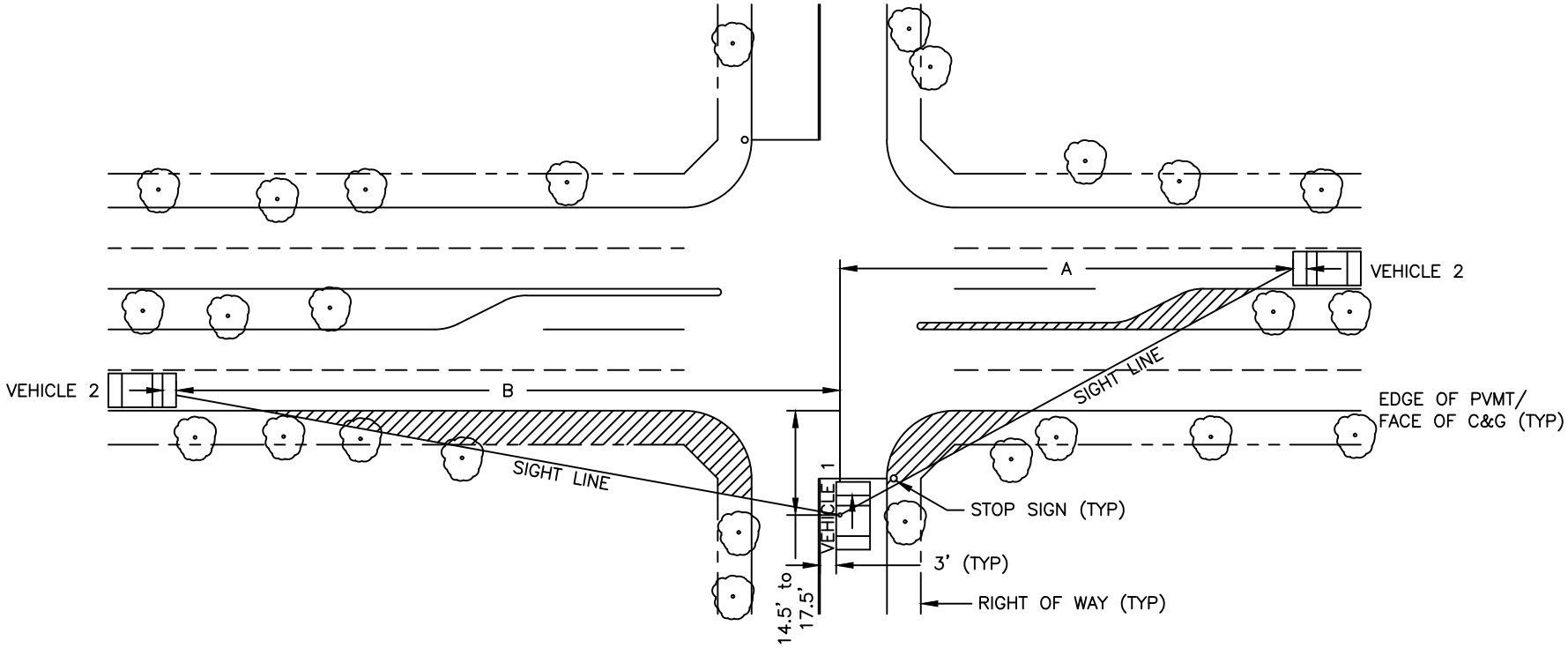

NOTES:

1. THE SHADED AREAS (SIGHT VISIBILITY TRIANGLES) SHALL BE KEPT CLEAR OF VEGETATION THAT AT MATURITY WILL HAVE HEIGHTS GREATER THAN 3' AND TREES THAT HAVE BRANCHES LOWER THAN 7'; AS MEASURED FROM THE PAVEMENT SURFACE.
2. ABOVE GROUND UTILITY FACILITIES AND APPURTENANCES ABOVE 3 FEET IN HEIGHT SHALL NOT BE LOCATED WITHIN THE SIGHT VISIBILITY TRIANGLE.
3. SIGNAGE APPROVED BY THE CITY FOR USE IN THE RIGHT OF WAY MAY BE LOCATED WITHIN THE SIGHT VISIBILITY TRIANGLES.
4. THE LINE OF SIGHT SHALL BE SHOWN AT INTERSECTIONS ON ALL LANDSCAPING PLANS, GRADING PLANS, AND TENTATIVE TRACT PLANS WHERE SAFE SIGHT DISTANCE IS QUESTIONABLE. IN CASES WHERE AN INTERSECTION IS LOCATED ON A VERTICAL CURVE, A PROFILE OF THE SIGHT LINE MAY BE REQUIRED.
5. TO ESTABLISH THE LINE OF SIGHT, VEHICLE 1 SHOULD BE POSITIONED SO THAT THE DRIVERS EYE IS 14.5' TO 17.5' BACK FROM THE EDGE OF PAVEMENT / FACE OF CURB AND 3.5' ABOVE THE PAVEMENT. DRIVER IS ASSUMED TO BE 3.0' RIGHT OF CENTER LINE IN LANE.
6. APPROACH VEHICLE (VEHICLE 2) IS POSITIONED IN THE CENTER OF ITS LANE AND ASSUMED TO BE 4.25' ABOVE THE PAVEMENT.
7. DRAWING DEPICTS TYPICAL PASSENGER CAR SITUATION WITHOUT GRADES. ADJUSTMENTS FOR GRADES SHALL BE MADE PER AASHTO.
8. EASEMENTS TO BE SHOWN AND DIMENSIONED ON FINAL PLAT.

A = SIGHT DISTANCE TO RIGHT FOR VEHICLE 1
B = SIGHT DISTANCE TO LEFT FOR VEHICLE 1

DESIGN SPEED (85th PERCENTILE) OF INTERSECTING ROADWAY	SIGHT DISTANCE FOR PASSENGER VEHICLE 1 TO TURN LEFT OR RIGHT				
	A				B
	1–LANE [FT]	2–LANE [FT]	3–LANE / 2–LANE w/ MEDIAN [FT]	3–LANE w/ MEDIAN [FT]	
25 MPH	280	295	–	–	240
30 MPH	335	355	–	–	290
35 MPH	390	415	440	465	335
40 MPH	445	475	500	530	385
45 MPH	500	530	565	600	430
50 MPH	555	590	625	665	480
55 MPH	610	650	690	730	530

CITY OF COTTONWOOD STANDARD DETAIL	INTERSECTION SIGHT VISIBILITY TRIANGLES	CITY ENGINEER	REVISED 08/18	DETAIL NO. 1605

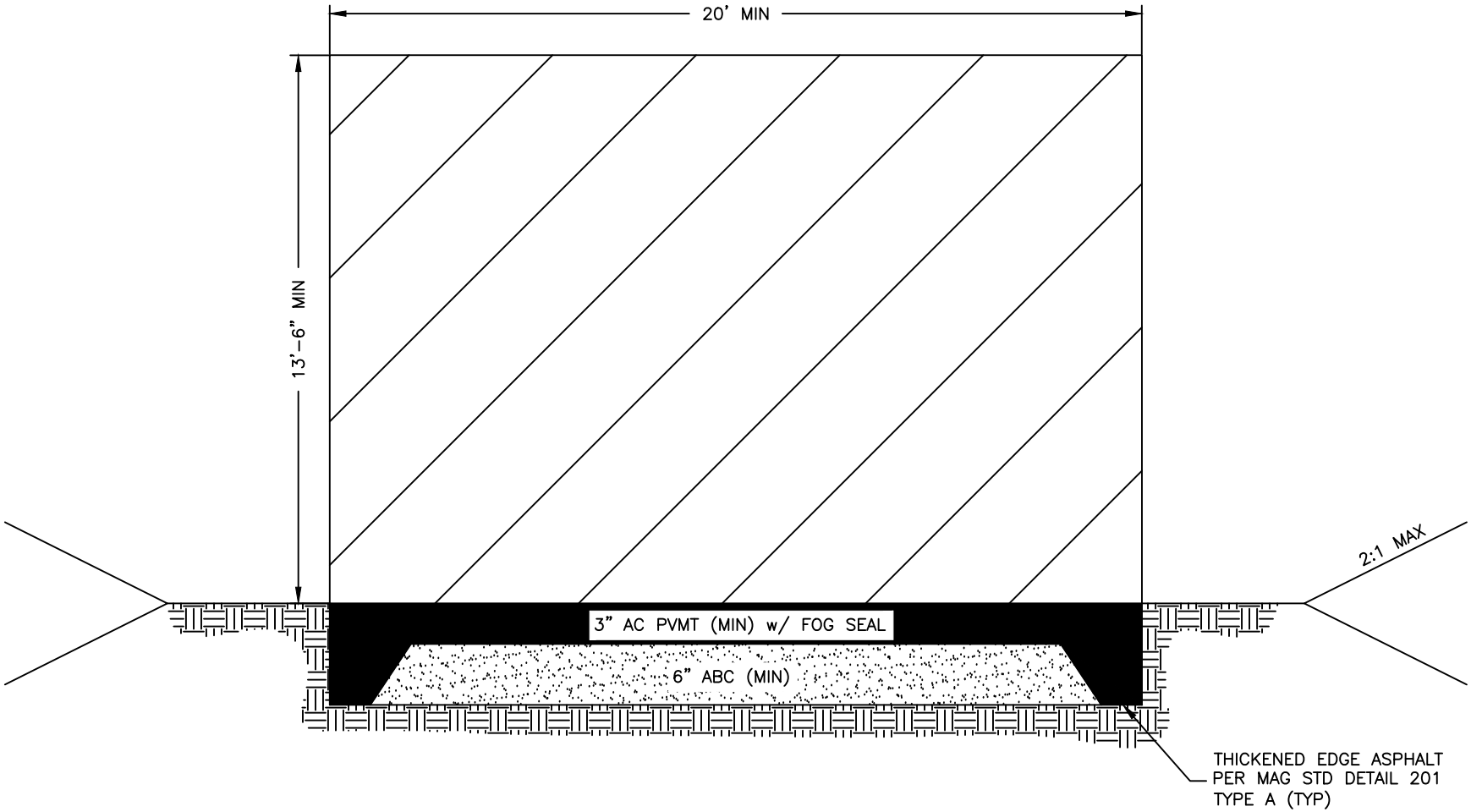

TYPICAL CROSS SECTION
NO SCALE

NOTES:
1. THE PAVEMENT STRUCTURE SHALL BE SUFFICIENT TO SUPPORT A MINIMUM AXLE LOAD OF 80,000 lbs. AND SHALL BE AN ALL-WEATHER SURFACE.
2. ACTUAL STRUCTURAL SECTION SHALL BE DETERMINED BY THE GEOTECHNICAL ENGINEER AND BE DESIGNED FOR HEAVY EQUIPMENT.
3. HATCHED AREA IN THE ABOVE DIAGRAM DEPICTS THE MINIMUM OBSTRUCTION FREE AREA REQUIRED FOR FIRE ACCESS PER THE CITY OF COTTONWOOD FIRE DEPARTMENT.

CITY OF COTTONWOOD STANDARD DETAIL	FIRE LANE ACCESS	CITY ENGINEER	REVISED	DETAIL NO.
			08/18	1610

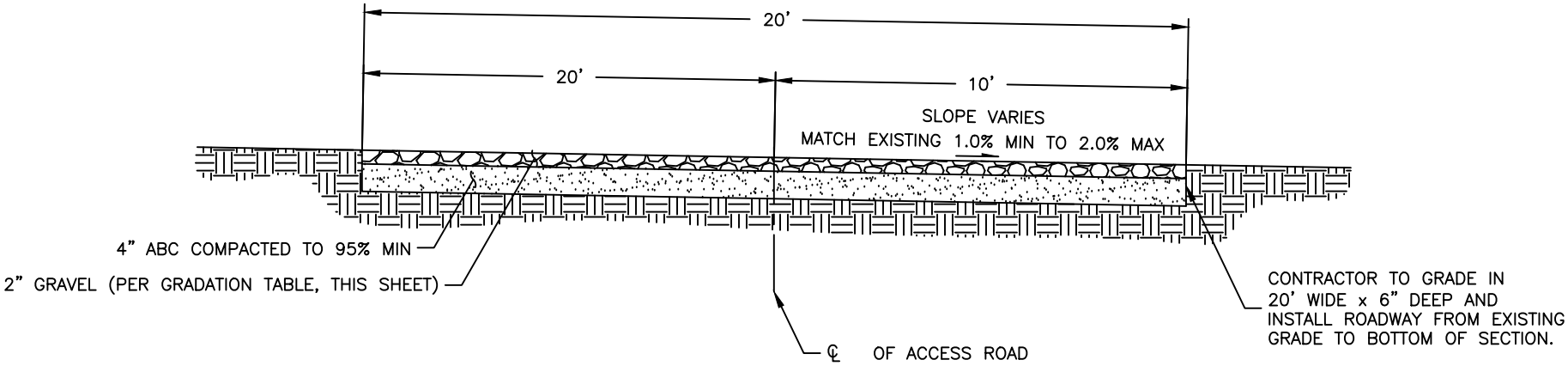

DETAIL 'A'
NO SCALE

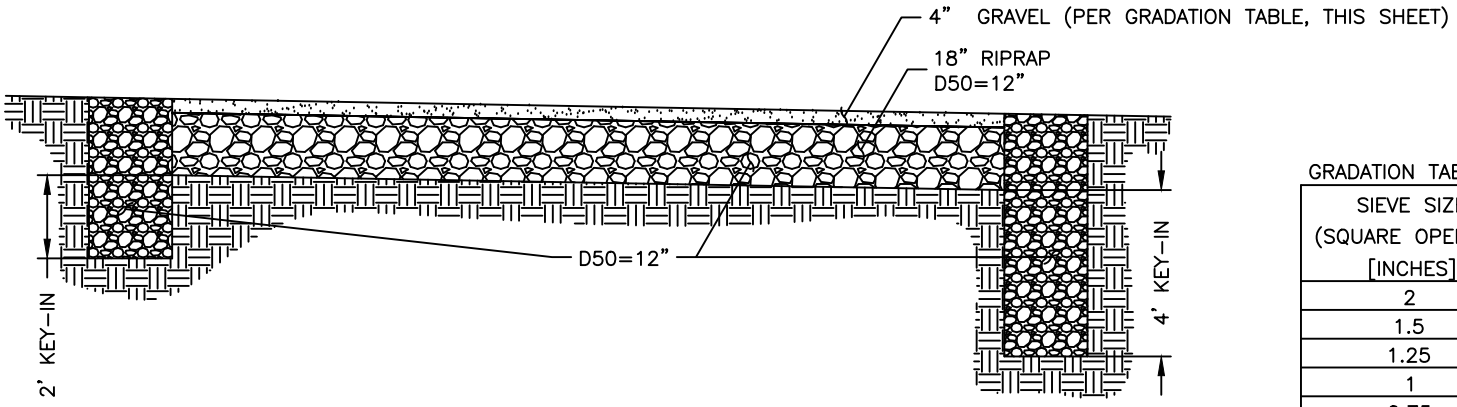

DETAIL 'B' – AT LOW WATER CROSSING
NO SCALE

GRADATION TABLE FOR CRUSHED AGGREGATE

SIEVE SIZE (SQUARE OPENING) [INCHES]	PERCENTAGE BY WEIGHT PASSING SIEVE
2	100
1.5	50–90
1.25	30–50
1	20–30
0.75	0–20

*CRUSHED AGGREGATE SHALL CONSIST OF CRUSHED ROCK WITH 75% OF THE SPECIFIED SIZE HAVING AT LEAST ONE FRACTURED FACE TESTED IN ACCORDANCE WITH AZ–212.

NOTES:
1. MATCH EXISTING GRADES AND TOPOGRAPHY.
2. ROAD AT WASH CROSSINGS TO BE D50=12" RIPRAP, 2' WIDE KEY–IN TO DEPTH, 2' UPSTREAM & 4' DOWNSTREAM.
3. FILL VOIDS WITH NATIVE MATERIAL AFTER PLACEMENT.

CITY OF COTTONWOOD STANDARD DETAIL	GRAVEL ACCESS ROAD	CITY ENGINEER	REVISED	DETAIL NO.
			08/18	1611

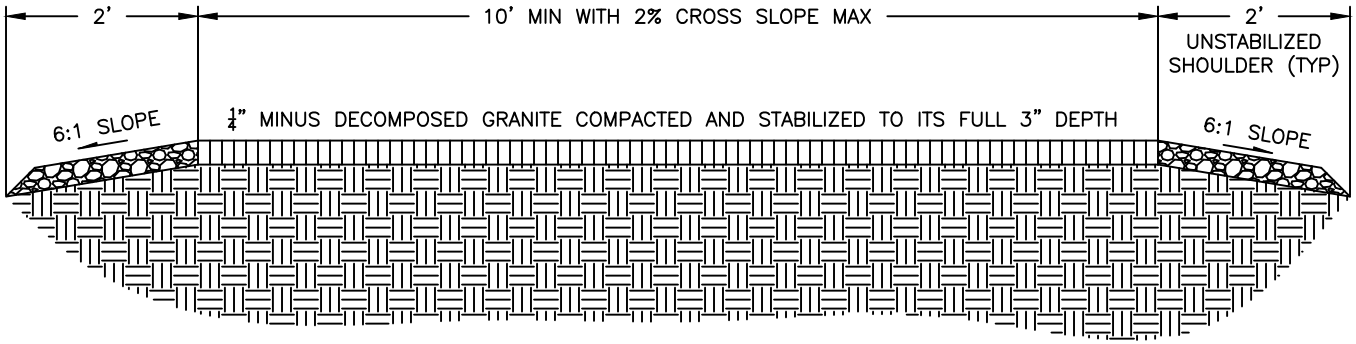

MULTI–USE TRAIL IN DECOMPOSED GRANITE

NO SCALE

NOTES:

1. ALL UNDERLYING NATURAL SOILS SHALL BE COMPACTED TO 90% MIN.
2. NO RUNNING SLOPE SHALL EXCEED 5%. IF RUNNING SLOPE EXCEEDS 5%, TRAIL MUST CONFORM TO AMERICANS WITH DISABILITIES ACT GUIDELINES.
3. TRAILS WILL NOT EXCEED 8% SLOPES, SLOPES 5–8% NOT TO EXCEED 30' DISTANCE WITHOUT 5' LANDING. REFER TO U.S. DEPARTMENT OF JUSTICE WEBSITE FOR MORE INFORMATION.
4. MULTI–USE TRAILS LOCATED WITHIN OR ADJACENT TO OPEN SPACE OR WASH CORRIDORS WILL BE LOCATED WITHIN A MINIMUM 20' PUBLIC TRAIL EASEMENT THAT MAY INCLUDE A PUBLIC UTILITY EASEMENT.
5. THE CITY ENGINEER MAY MAKE EXCEPTIONS TO THE TRAIL WIDTH.

CITY OF COTTONWOOD STANDARD DETAIL	MULTI–USE TRAILS	CITY ENGINEER	REVISED	DETAIL NO.
			08/18	1612

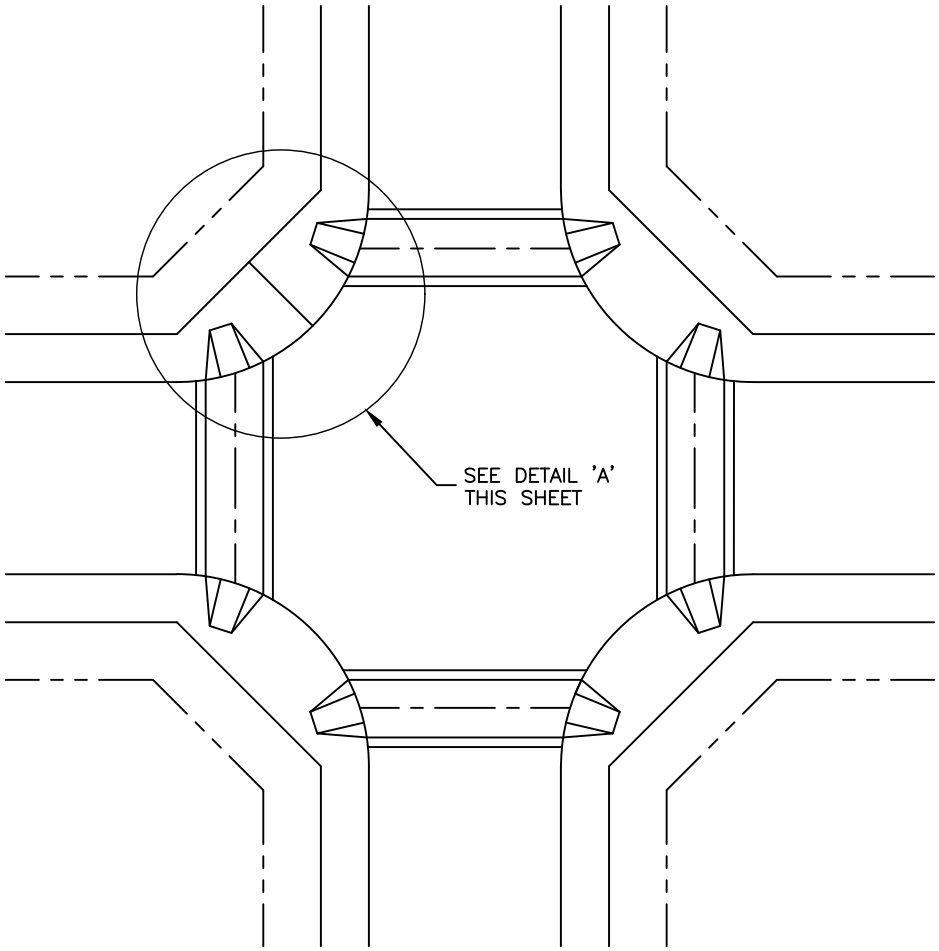

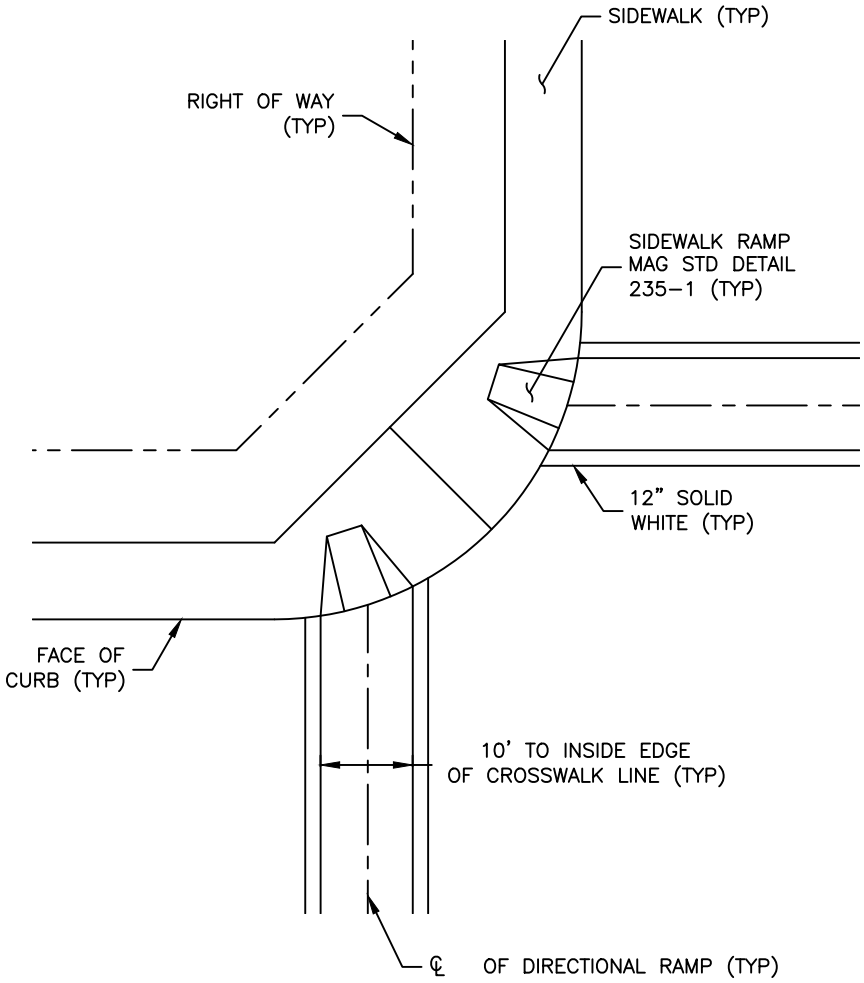

DETAIL 'A'
NO SCALE

CITY OF COTTONWOOD STANDARD DETAIL	CROSSWALK STRIPING AT INTERSECTIONS	CITY ENGINEER	REVISED	DETAIL NO.
			08/18	1620

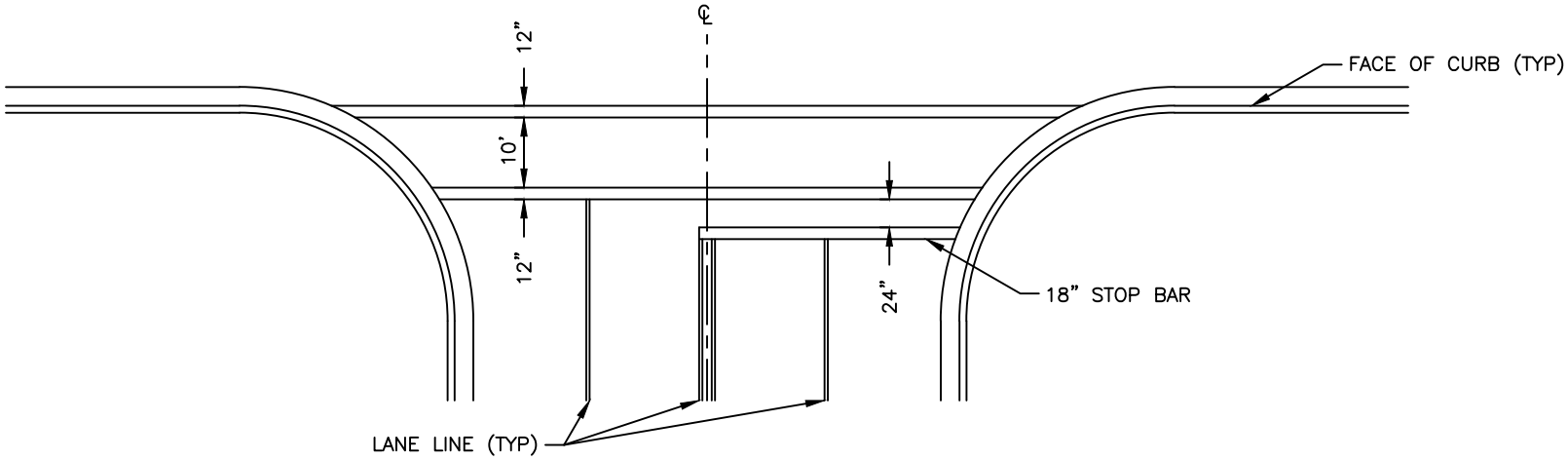

STANDARD CROSSWALK MARKING

WIDTH OF LINES 12" STANDARD
WIDTH OF CROSSWALK 10' STANDARD

NOTES:
1. ALL LANE LINES TERMINATE AT STOP BAR.
2. CROSSWALK AND STOP BAR MARKINGS SHALL BE 90 MIL (0.090 INCH) THICK ALKYD EXTRUDED THERMOPLASTIC.

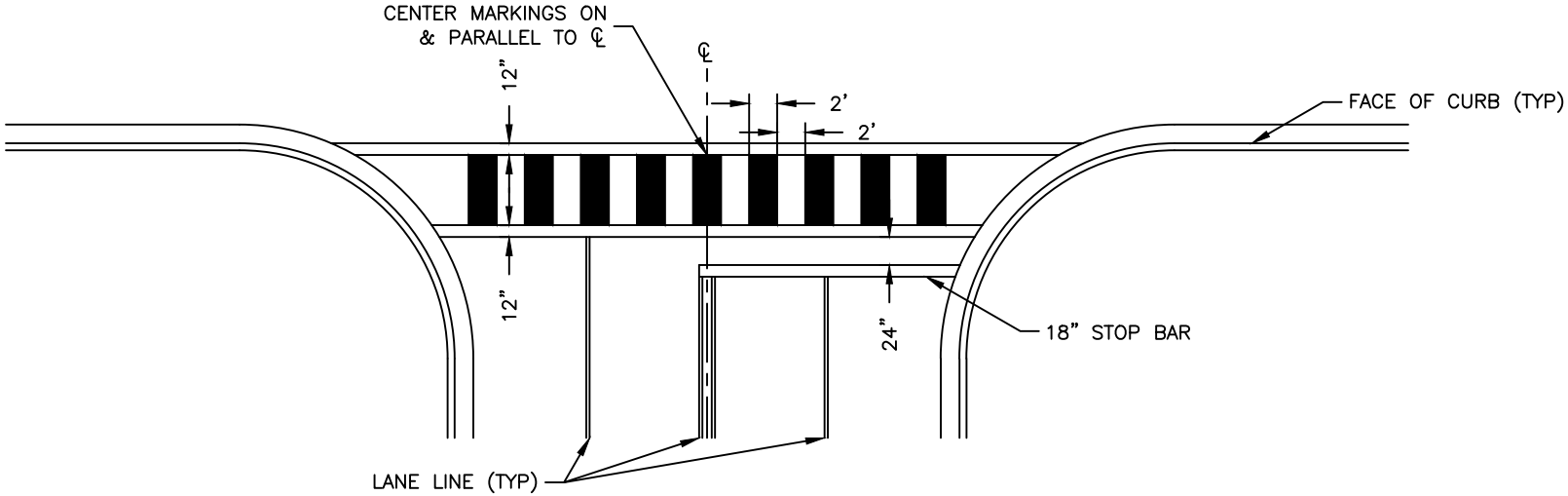

HIGH VISIBILITY MARKING

USE WHERE SPECIFIED

NOTES:
1. ALL LANE LINES TERMINATE AT STOP BAR.
2. CROSSWALK AND STOP BAR MARKINGS SHALL BE 90 MIL (0.090 INCH) THICK ALKYD EXTRUDED THERMOPLASTIC.

CITY OF COTTONWOOD STANDARD DETAIL	CROSSWALK MARKINGS	CITY ENGINEER	REVISED	DETAIL NO.
			08/18	1621

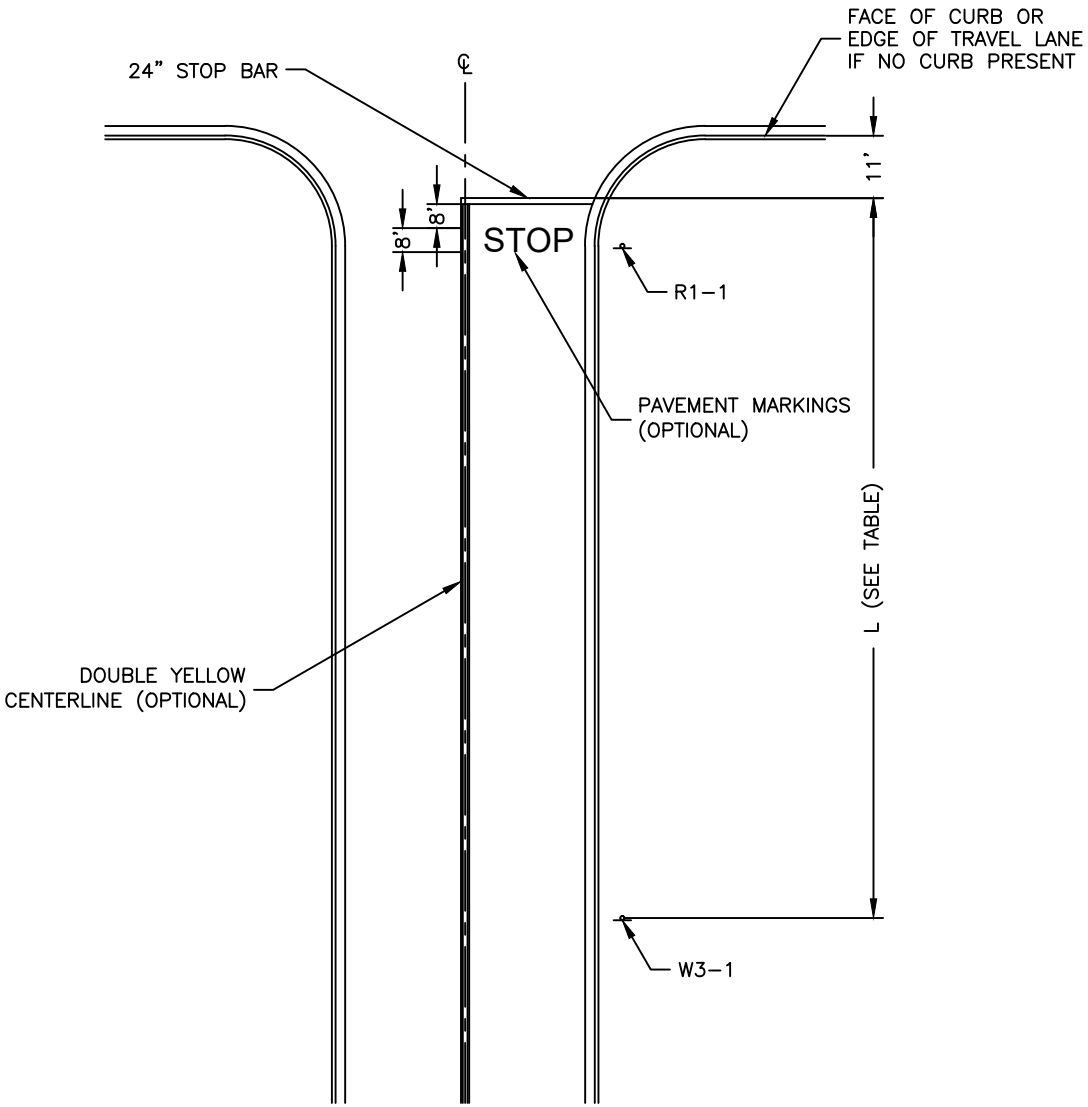

NOTES:

1. USE OF THE W3-1 'STOP AHEAD' SIGN SHALL BE INSTALLED AT SPECIFIC LOCATIONS DEMONSTRATING LIMITED SIGHT DISTANCE OR AS DIRECTED BY THE CITY ENGINEER.
2. 'STOP SIGN' NORMALLY LOCATED AT CURB RETURN OR POINT OF OPTIMUM VISIBILITY.
3. STOP BARS SHALL BE REFLECTORIZED 90 MIL THERMOPLASTIC. DOUBLE YELLOW CENTERLINE SHALL BE REFLECTORIZED PAINT, 24-28 MIL IN THICKNESS.
4. ALL PAVEMENT MARKINGS SHALL BE CENTERED IN THE TRAVEL LANE.
5. R1-1 'STOP SIGN' SHALL BE A MINIMUM OF THIRTY (30") INCHES IN WIDTH. ALL SIGN SHEETING MATERIAL TO BE DIAMOND GRADE VIP.
6. OPTIONAL 'STOP' PAVEMENT MARKING MAY BE REQUIRED AS DIRECTED BY THE CITY ENGINEER.

L VALUES

POSTED SPEED LIMIT [MPH]	DOWNGRADE			
	0% [FT]	3% [FT]	6% [FT]	9% [FT]
25 OR NOT POSTED	250	260	270	290
30	305	315	335	355
35	360	380	400	430

CITY OF COTTONWOOD STANDARD DETAIL	STOP MARKINGS	CITY ENGINEER	REVISED	DETAIL NO.
			08/18	1622

APPENDIX C: CITY OF COTTONWOOD CADD STANDARDS

[This Page Intentionally Left Blank]

TITLE 1
TITLE 2
COTTONWOOD, ARIZONA

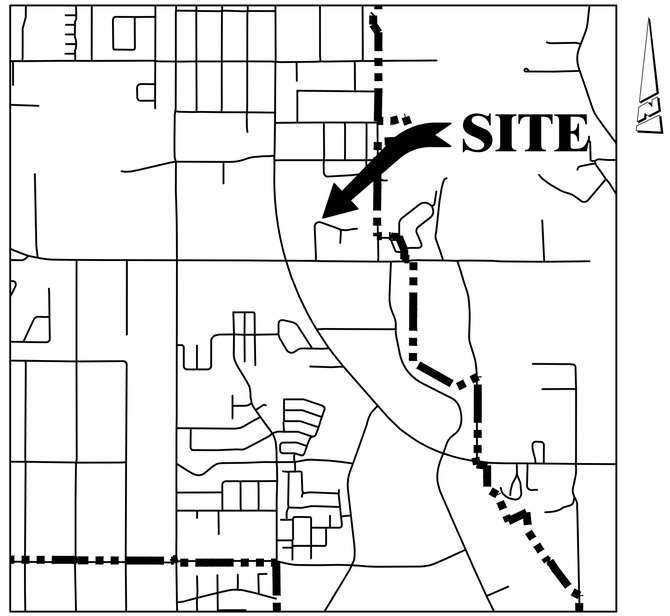

SITE MAP

SCALE: 1"=1000' (APPROX.)

QUANTITIES

NOTE	ITEM	QUANTITY	UNIT
△1	DEMOLITION NOTE 1	–	–
△2	DEMOLITION NOTE 2	–	–
△3	DEMOLITION NOTE 3	–	–
△4	DEMOLITION NOTE 4	–	–
△5	DEMOLITION NOTE 5	–	–
①1	CONSTRUCTION NOTE 1	–	–
②2	CONSTRUCTION NOTE 2	–	–
③3	CONSTRUCTION NOTE 3	–	–
④4	CONSTRUCTION NOTE 4	–	–
⑤5	CONSTRUCTION NOTE 5	–	–

NOTE: THE ENGINEER DOES NOT WARRANT ANY QUANTITIES SHOWN ON THESE PLANS. IT SHALL BE THE CONTRACTOR'S RESPONSIBILITY TO VERIFY ALL QUANTITIES.

INDEX OF SHEETS

SHEET 1	COVER SHEET
SHEET 2	GENERAL NOTES
SHEET 3	DETAILS
SHEET 4	CACTUS ST. TO STA. 94+50
SHEET 5	STA. 94+50 TO 100+50
SHEET 6	STA. 100+50 TO 109+50
SHEET 7	STA. 109+50 TO 118+50
SHEET 8	STA. 118+50 TO 127+00
SHEET 9	STA. 127+00 TO 135+50
SHEET 10	STA. 135+50 TO 144+50
SHEET 11	STA. 144+50 TO 152+50
SHEET 12	STA. 152+50 TO 159+50
SHEET 13	STA. 159+50 TO 168+50
SHEET 14	STA. 168+50 TO 177+50
SHEET 15	STA. 177+50 TO 186+50
SHEET 16	STA. 186+50 TO 195+50
SHEET 17	STA. 195+50 TO 204+50
SHEET 18	STA. 204+50 TO HIGHWAY 89A
SHEET 19	COVE PARKWAY

CONTACT INFORMATION

ENGINEER: CITY OF COTTONWOOD
1490 WEST MINGUS AVENUE
COTTONWOOD, AZ 86326
TEL: (928) 634-0186

CABLE: CABLE ONE
235 SOUTH 6TH STREET
COTTONWOOD, AZ 86326
TEL: (928) 634-9677

ELECTRIC: APS
1250 EAST STATE ROUTE 89A
COTTONWOOD, AZ 86326
TEL: (928) 646-8412

GAS: UNISOURCE
500 SOUTH WILLARD STREET
COTTONWOOD, AZ 86326
TEL: (928) 634-5555

SEWER: CITY OF COTTONWOOD
1480 WEST MINGUS AVENUE
COTTONWOOD, AZ 86326
TEL: (928) 643-8033

TELEPHONE: CENTURY LINK
500 SOUTH CALVARY WAY
COTTONWOOD, AZ 86326
TEL: (928) 634-7556

WATER: CITY OF COTTONWOOD
111 NORTH MAIN STREET
COTTONWOOD, AZ 86326
TEL: (928) 634-0186, EXT. 3306

LEGEND

ABC	AGGREGATE BASE COURSE
AC	ASBESTOS CONCRETE
BFP	BACKFLOW PREVENTER
B/W	FG AT LOW SIDE OF WALL
℄	CENTER LINE
CMP	CORRUGATED METAL PIPE
CMPA	CORRUGATED METAL ARCH PIPE
C.Y.	CUBIC YARDS
DIP	DUCTILE IRON PIPE
EA.	EACH
EP	EDGE OF PAVEMENT
EX.	EXISTING
FG	FINISHED GRADE
FGW	FINISHED GRADE @ WALL
FL	FLOW LINE
INV	PIPE INVERT
L.F.	LINEAR FEET
L.S.	LUMP SUM
LT	STATION OFFSET LEFT
MDD	MAXIMUM DRY DENSITY
MH	MANHOLE
OFF	OFFSET
℄	PROPERTY LINE
ROW	RIGHT-OF-WAY
RT	STATION OFFSET RIGHT
S.F.	SQUARE FEET
STA.	STATION
S.Y.	SQUARE YARDS
T/C	TOP OF CURB
T/F	TOP OF FOOTING
T/W	TOP OF WALL
Ⓢ	EXISTING SANITARY SEWER MANHOLE
⊗	EXISTING WATER VALVE
	EXISTING FIRE HYDRANT
	EXISTING UTILITY POLE
	EXISTING GUY POLE
	EXISTING VALVE/METER BOX
M	EXISTING WATER METER
G	EXISTING GAS METER
E	EXISTING ELECTRIC METER
W	EXISTING WATER VALVE
S	EXISTING SEWER CLEANOUT
	EXISTING SIGN & BASE
	PROPERTY LINE
S	EXISTING SEWER MAIN
G	EXISTING GAS MAIN
X	EXISTING FENCE LINE
	FLOW LINE OF DITCH/SWALE
+ XXX.XX	EXISTING SPOT ELEVATION
	EXISTING GROUND CONTOUR
	AC PAVEMENT EDGE MILL
	REMOVE AND REPLACE AC PAVEMENT

Contact Arizona 811 at least two full working days before you begin excavation

ARIZONA811 BLUE STAKE, INC.

Call 811 or click Arizona811.com

Revisions:

Engineer: Name

Technician: Name

Scale: 1" = 20'

Date: mm/dd/yyyy

Drawing No: DWG Name

COVER SHEET

Engineering Department

1490 W. Mingus Ave.
Cottonwood, AZ 86326

"Inspiring a Vibrant Community"

SHEET ? OF ?

DWG: FullPath: C:\Users\Robert\Desktop\CAD Standards\01 Cover Sheet.dwgPlot Date/Time: 01/29/19 03:48pm

CITY OF COTTONWOOD GENERAL NOTES

1. THE CITY OF COTTONWOOD DOES NOT WARRANT ANY QUANTITIES SHOWN ON THESE PLANS. IT SHALL BE THE CONTRACTOR'S RESPONSIBILITY TO VERIFY ALL QUANTITIES. THE CITY OF COTTONWOOD SHALL NOT BE HELD RESPONSIBLE FOR ERRORS IN ESTIMATES OF QUANTITIES, MATERIALS, SCHEDULE, INSTALLATION REQUIREMENTS, OR SIZE.
2. THE CITY OF COTTONWOOD ENGINEERING DEPARTMENT, INSPECTION STAFF, SHALL BE NOTIFIED 48 HOURS PRIOR TO ANY CONSTRUCTION WORK BY TELEPHONE AT (928) 634-8033. ANY WORK CONCEALED WITHOUT INSPECTION SHALL BE SUBJECT TO REMOVAL AND REPLACEMENT AT THE CONTRACTOR'S EXPENSE.
3. AN APPROVED SET OF PLANS MUST BE AVAILABLE ON THE JOB SITE AT ALL TIMES. THE CONTRACTOR'S REPRESENTATIVE (CAPABLE OF COMMUNICATING WITH THE CITY'S REPRESENTATIVES) SHALL BE ON THE JOB AT ALL TIMES THE WORK IS BEING PURSUED.
4. THE PROCEDURES AND METHODS USED TO SAMPLE, TEST MATERIALS, AND REPORT TEST RESULTS WILL BE DETERMINED BY THE CITY OF COTTONWOOD ENGINEERING DEPARTMENT. FOR ALL PHASES OF CONSTRUCTION, THE TYPE, SCHEDULING, FREQUENCY AND LOCATION OF ALL MATERIALS TESTING AND SAMPLING SHALL BE DETERMINED BY THE ENGINEERING DEPARTMENT. THE INSPECTOR SHALL SELECT TESTING LOCATIONS AND INCREASE OR DECREASE THE FREQUENCY OF THE TESTS. COSTS OF MATERIAL TESTING SHALL BE THE RESPONSIBILITY OF THE PROPERTY DEVELOPER. A THIRD PARTY TESTING LABORATORY SHALL BE USED FOR ALL MATERIAL TESTING. AS A GENERAL GUIDELINE TESTING FREQUENCY SHALL BE:
   - CONCRETE – 1 SET OF 4 CYLINDERS PER 50 CUBIC YARDS @ 3,000 PSI.
   - SUBGRADE – 1 DENSITY TEST PER 500 LINEAL FEET @ 95% COMPACTION.
   - BASE COURSE – 1 DENSITY TEST PER 500 LINEAL FEET @ 100% COMPACTION.
   - ASPHALT – 1 DENSITY TEST PER 500 LINEAL FEET IN EACH LANE. 1 EXTRACTION PER DAY OF PAVING. 1 GRADATION CHECK PER PAVING DAY.
5. THE CONTRACTOR IS RESPONSIBLE FOR THE DEMOLITION, REMOVAL, AND LEGAL DISPOSAL OF ALL ITEMS SHOWN AS BEING REMOVED ON THESE PLANS.
6. IT IS THE CONTRACTOR'S SOLE RESPONSIBILITY TO VERIFY THE PRESENCE AND LOCATION OF ALL EXISTING OVERHEAD AND/OR UNDERGROUND UTILITIES AND IRRIGATION LINES THAT MAY INTERFERE WITH THIS CONSTRUCTION, WHETHER OR NOT SAID UTILITIES ARE SHOWN ON THE CONSTRUCTION PLANS FOR THIS PROJECT AND TO ADEQUATELY PROTECT, REPAIR AS REQUIRED, AND MAINTAIN ANY SUCH UTILITIES AND IRRIGATION LINES.
7. THE CONTRACTOR SHALL ONLY USE RECLAIMED WATER FOR COMPACTION AND DUST CONTROL. RECLAIM WATER PURCHASE IS AVAILABLE BY CONTACTING THE CITY OF COTTONWOOD UTILITIES DEPARTMENT (928) 634-0186.
8. ALL DRAINAGE PROTECTIVE DEVICES SUCH AS SWALES, INTERCEPTION DITCHES, PIPES PROTECTIVE BERMS, CONCRETE CHANNELS OR OTHER MEASURES DESIGNED TO PROTECT IMPROVEMENTS, WHETHER EXISTING OR PROPOSED, FROM RUNOFF OR DAMAGE FROM STORM WATER, MUST BE CONSTRUCTED PRIOR TO THE CONSTRUCTION OF ANY IMPROVEMENTS.
9. TRAFFIC CONTROL SHALL CONFORM WITH THE CITY OF COTTONWOOD R.O.W. PERMIT, MUTCD, AND THE CITY OF COTTONWOOD RIGHT-OF-WAY PERMIT GUIDELINES, AS APPLICABLE.
10. ALL CONTRACTORS ARE RESPONSIBLE TO OBTAIN A NATIONAL POLLUTION DISCHARGE ELIMINATION SYSTEM (NPDES) PERMIT IN ACCORDANCE WITH FEDERAL AND STATE REGULATIONS, INCLUDING NOTICE OF INTENT (NOI), NOTICE OF TERMINATION, AND STORM WATER POLLUTION PREVENTION PLAN (SWPPP). A COPY OF THE NOI AND SWPPP SHALL BE AVAILABLE ON THE JOB SITE AT ALL TIMES. THIS APPLIES TO ALL SITES GREATER THAN 1.0 ACRE IN SIZE.
11. IT IS THE RESPONSIBILITY OF THE CONTRACTOR TO OBTAIN ANY AND ALL OTHER PERMITS AND MEET ANY REQUIREMENTS SET FORTH BY OTHER AGENCIES OR UTILITIES, WHICH HAVE JURISDICTION, AT THE CONTRACTOR'S EXPENSE, INCLUDING OSHA.
12. ALL CONTRACTORS ARE RESPONSIBLE TO CONSTRUCT STABILIZED CONSTRUCTION ENTRANCES, IF REQUIRED, IN ORDER TO REDUCE OR ELIMINATE THE TRACKING OF SEDIMENT ONTO PUBLIC RIGHTS-OF-WAYS OR STREETS. GRAVEL TRACK-OUT PADS SHALL MEET CURRENT M.A.G. STANDARDS. THE CONTRACTOR SHALL IMMEDIATELY REMOVE ANY SEDIMENT TRACKED ONTO PUBLIC RIGHTS-OF-WAYS OR STREETS.
13. THE CONTRACTOR SHALL BE RESPONSIBLE FOR THE MAINTENANCE OF ALL WORK AREAS INCLUDING STREETS & PAVED AREAS, DRAINAGEWAYS AND DRAINAGE APPURTENANCES, WORK AREA UTILITIES WHETHER BURIED AND EXPOSED, EMBANKMENTS & CUT SLOPES, AND ALL UNFINISHED WORK AREAS. THE CONTRACTOR SHALL DO WHAT IS REQUIRED SO THAT ACCESS IS NOT DENIED TO ANY PROPERTY ALONG THE PROPOSED CONSTRUCTION FOR ANY DURATION THAT WOULD INTERFERE WITH NORMAL DAILY INGRESS AND EGRESS. ALL DRIVING AREAS SHALL BE GRADED TO FINISH SURFACE FOLLOWING THE REQUIRED TRENCH FILL SPECIFICATIONS IMMEDIATELY AFTER THE INSTALLATION IS COMPLETE IN ORDER THAT ACCESS IS NOT INTERRUPTED AND THAT ACCESS IS UNINHIBITED. NO UNEVEN SURFACES SHALL BE ALLOWED THAT COULD CAUSE ACCIDENTS, VEHICLE DAMAGE, OR LIMITED ACCESS. THE CONTRACTOR SHALL DO WHAT IS REQUIRED TO ASSURE THAT NO UTILITIES ARE INTERRUPTED ALONG THE PROPOSED CONSTRUCTION. THE CONTRACTOR SHALL LEAVE ALL DRAINAGEWAYS AND APPURTENANCES IN OPERATING ORDER THROUGHOUT THE CONSTRUCTION DURATION. THE CONTRACTOR SHALL ASSURE THAT ALL CUT AND FILL SLOPES ARE REPLACED AT THE PRIOR CONDITIONS OR AS SHOWN ON THE APPROVED PLANS. THE CONTRACTOR SHALL SEE THAT ALL UNFINISHED WORK AREAS SHALL BE MAINTAINED TO ASSURE THAT OPEN TRENCHES ARE SECURE AND NOT LEFT UNATTENDED, THAT DRAINAGE IS NOT ALLOWED TO ENTER OPEN TRENCHES AND DAMAGE EXISTING AND NEW UTILITIES, AND THAT PUBLIC SAFETY IS ASSURED ALONG THE ENTIRE CONSTRUCTION ROUTE AT ALL TIMES. CONTRACTOR SHALL MEET OSHA STANDARDS FOR TRENCH SAFETY.
14. PRIOR TO THE START OF ANY WORK, THE CONTRACTOR SHALL SCHEDULE AND ATTEND A PRE-CONSTRUCTION AND UTILITY COORDINATION MEETING. ALL WORK, PLANS, SPECIFICATIONS, INSPECTION REQUIREMENTS, AND SCHEDULING SHALL BE DISCUSSED AT THIS MEETING.
15. THE CONTRACTOR SHALL BE RESPONSIBLE FOR FOLLOWING ALL ARIZONA BLUE STAKE LAWS PRIOR TO AND DURING CONSTRUCTION BY CONTACTING THE BLUE STAKE AUTHORITY AT 1-800-STAKE-IT. THE CONTRACTOR IS RESPONSIBLE FOR MAINTAINING THE INTEGRITY OF THE BLUE STAKE AS IS REQUIRED THROUGHOUT THE PROJECT CONSTRUCTION DURATION. THE CONTRACTOR IS RESPONSIBLE FOR COMPLYING WITH ALL APPLICABLE ARIZONA BLUE STAKE AUTHORITY REGULATIONS. CONTRACTOR SHALL PROVIDE THE CITY OF COTTONWOOD ENGINEERING STAFF WITH EVIDENCE OF ANY AREA BEING DISTURBED HAVING BEEN BLUE STAKED PRIOR TO THE COMMENCEMENT OF CONSTRUCTION.
16. THE CONTRACTOR IS RESPONSIBLE TO PROVIDE SUFFICIENT MANPOWER, PARTS, AND EQUIPMENT ON THE JOB AT ALL TIMES DURING THE DURATION OF THE CONSTRUCTION PROJECT TO BOTH COMPLY WITH THE PROJECT SPECIFICATIONS AND ALSO ACCOMPLISH THE WORK IN A TIMELY MANNER.
17. CONTRACTOR IS RESPONSIBLE FOR COMPLYING WITH ALL APPLICABLE SPECIFICATIONS AS REQUIRED IN THE CURRENT UNIFORM STANDARD SPECIFICATIONS AND DETAILS OF PUBLIC WORKS CONSTRUCTION BY MARICOPA ASSOCIATION OF GOVERNMENT COMMONLY REFERRED TO AS MAG STANDARDS, CITY OF COTTONWOOD REGULATIONS OR SPECIFICATIONS, ANSI/AWWA SPECIFICATIONS, AND/OR OTHER STATE AND FEDERAL SPECIFICATIONS, AS APPLICABLE.
18. THE CONTRACTOR SHALL BE RESPONSIBLE TO DETERMINE TRENCH BRACING, SHEATHING, SHORING OR SIDE SLOPES AS REQUIRED FOR THE SAFETY AND CONFORMANCE TO ALL APPLICABLE OSHA LAWS AND CONSTRUCTION STANDARDS FOR THE EXCAVATION AND TRENCHING OF THIS PROJECT. THE CONTRACTOR SHALL ASSURE THAT SUITABLE AND SAFE CONDITIONS, INCLUDING PROPER TRAFFIC AND SAFETY CONTROL, ARE MET THROUGHOUT THE PROJECT DURATION OR WORK WILL BE CEASED UNTIL SUCH TIME THAT THE UNSAFE CONDITION IS RECTIFIED. THE CITY OF COTTONWOOD SHALL NOT BE HELD IN ANY WAY RESPONSIBLE FOR ANY LOST TIME BY THE CONTRACTOR DUE TO UNSAFE CONDITIONS OR THE ENFORCEMENT OF THIS SPECIFICATION
19. THE CONTRACTOR SHALL SUBMIT A TRAFFIC CONTROL PLAN TO THE CITY OF COTTONWOOD ENGINEERING DEPARTMENT, INSPECTION STAFF, FOR APPROVAL PRIOR TO THE COMMENCEMENT OF CONSTRUCTION.
20. THE CITY OF COTTONWOOD MAY SUSPEND THE WORK BY WRITTEN NOTICE WHEN, IN THEIR JUDGMENT, PROGRESS IS UNSATISFACTORY OR UNAUTHORIZED, THE PRODUCT IS UNSATISFACTORY, WEATHER CONDITIONS ARE UNSUITABLE OR THERE IS DANGER TO THE PUBLIC.
21. THE CITY OF COTTONWOOD MAY REQUIRE THE SUBMITTAL OF A "CERTIFICATE OF COMPLIANCE" AND/OR "MANUFACTURER'S GUIDELINES" FOR ANY MATERIALS USED IN THE WORK. MANUFACTURER'S GUIDELINES SHALL CONSIST OF WRITTEN INSTRUCTIONS FOR SHIPPING, HANDLING, UNLOADING, CUTTING, JOINING, INSTALLATION, STORAGE, AND/OR ANY OTHER FACETS OF WORKING.
22. SHOP DRAWINGS SHALL BE PROVIDED BY THE CONTRACTOR PER MAG SECTION 105.2.
23. THE CITY OF COTTONWOOD MAY ORDER ANY MATERIALS USED IN THE WORK TO BE TESTED ACCORDING TO AASHTO AND ASTM STANDARDS. THE CONTRACTOR SHALL, AT THEIR EXPENSE, SUPPLY CERTIFICATES OR RESULTS OF TESTING.
24. THE CONTRACTOR MAY SUBMIT CAREFULLY DOCUMENTED AND CONSIDERED WRITTEN PROPOSALS FOR ALTERNATE MATERIALS AND CONSTRUCTION METHODS. THOSE PROPOSALS THAT ARE FOUND TO BE IN CONFORMITY WITH GOOD ENGINEERING DESIGN AND CAN BE EASILY MAINTAINED BY CITY FORCES MAY BE GIVEN WRITTEN APPROVAL BY THE CITY ENGINEER FOR INCORPORATION IN THE CONSTRUCTION PLANS IF THEY ARE FOUND TO BE IN THE PUBLIC INTEREST.
25. ALL IMPROVEMENTS SHALL BE CONSTRUCTED BY CONTRACTORS LICENSED BY THE ARIZONA STATE REGISTRAR OF CONTRACTORS, WITH A CLASS OF LICENSE(S) FOR THE SPECIFIC WORK BEING PERFORMED.
26. THE CITY OF COTTONWOOD, INSPECTION STAFF, SHALL BE NOTIFIED 24 HOURS PRIOR TO BEGINNING DIFFERENT PHASES OF CONSTRUCTION SO THAT OBSERVATIONS MAY BE SCHEDULED.
27. APPROVAL OF A PORTION OF THE WORK IN PROGRESS DOES NOT GUARANTEE ITS FINAL ACCEPTANCE. TESTING AND EVALUATION MAY CONTINUE UNTIL WRITTEN FINAL ACCEPTANCE OF A COMPLETE WORKABLE UNIT. ACCEPTANCE OF COMPLETED IMPROVEMENTS WILL NOT BE GIVEN UNTIL DEFECTIVE OR UNAUTHORIZED WORK IS REMOVED, AND FINAL CLEAN-UP IS COMPLETE.
28. THE CITY OF COTTONWOOD RESERVES THE RIGHT TO REQUEST MODIFICATIONS TO THESE PLANS DURING CONSTRUCTION IF FIELD CONDITIONS WARRANT AND THE DESIGN ENGINEER CONCURS.
29. ANY DEFECTS WHICH APPEAR IN THE WORK WITHIN THE WARRANTY PERIOD GIVEN IN THE PROJECT CONTRACT FROM THE DATE OF ACCEPTANCE AND WHICH ARE DUE TO IMPROPER WORKMANSHIP OR INFERIOR MATERIALS SUPPLIED SHALL BE CORRECTED BY OR AT THE EXPENSE OF THE CONTRACTOR.
30. THE CONTRACTOR SHALL BE RESPONSIBLE FOR MAINTENANCE OF THE STREETS AND OF PARTIALLY COMPLETED PORTIONS OF THE WORK UNTIL FINAL ACCEPTANCE OF THE WORK. CONTRACTOR SHALL BE RESPONSIBLE FOR MAINTAINING THE QUALITY OF EXISTING STREETS LEADING TO THE PROJECT SITE. EXISTING STREETS FOUND TO BE DAMAGED BY CONSTRUCTION TRAFFIC SHALL BE REPAIRED TO THE SATISFACTION OF THE CITY OF COTTONWOOD BY THE CONTRACTOR AT NO ADDITIONAL EXPENSE TO THE OWNER.
31. STREETS CLOSED BECAUSE OF CONSTRUCTION SHALL BE PROVIDED WITH BARRICADES AND/OR HAZARD SIGNS AS REQUIRED AND APPROVED BY THE CITY OF COTTONWOOD ENGINEERING DEPARTMENT, INSPECTION STAFF. THE CITY OF COTTONWOOD DEPARTMENT OF PUBLIC SAFETY SHALL BE NOTIFIED 48 HOURS PRIOR TO ANY STREET CLOSURE.
32. PRIOR TO APPROVAL OF AN IMPROVEMENT PROJECT, AN "AS-BUILT" PLAN MUST BE SUBMITTED TO THE CITY OF COTTONWOOD ENGINEER. THE AS-BUILT PLAN SHALL INDICATE THE ACTUAL LOCATION OF WATER MAINS, SEWER MAINS, UNDERGROUND DRAINAGE STRUCTURES, ALL SEWER AND WATER SERVICES, ALL FITTINGS, VALVES AND MANHOLES RELATIVE TO RIGHT-OF-WAY BOUNDARIES, LOT LINE, OR OTHER POINTS OF SURVEY.
33. THE ACCURACY OF ALL CONSTRUCTION WORK SHALL BE MAINTAINED AND VERIFIED BY THE CONTRACTOR'S SURVEYOR AT THE CONTRACTOR'S EXPENSE. STAKES WILL BE SET ESTABLISHING LINES AND GRADES (FINISH OR FLOWLINE) FOR ALL CONSTRUCTION INCLUDING ROADS, CURB AND GUTTER, SIDEWALKS, UTILITIES, STRUCTURES, AND OTHER WORK AS CONSIDERED NECESSARY. ALL SURVEY CONTROL SHALL BE SET BY THE CONTRACTOR'S SURVEYOR FROM MONUMENTS PER THESE APPROVED PLANS.
34. A COPY OF THE A.D.E.Q. PERMITS ISSUED PRIOR TO NEW CONSTRUCTION, EXTENSION TO, OR MODIFICATION OF A WATER DISTRIBUTION SYSTEM, SEWAGE COLLECTION OR INDIVIDUAL SEWAGE TREATMENT SYSTEM SHALL BE ONSITE AT ALL TIMES.
35. RELOCATION OF SIGNS, TREES SHRUBS, MAILBOXES AND OTHER INCIDENTALS REQUIRING RELOCATION SHALL BE MOVED ONLY FAR ENOUGH TO ALLOW CONSTRUCTION OF THE PROJECT AND CAUSE THE LEAST DISRUPTION TO PRIVATE PROPERTY, AND LANDSCAPE. FINAL POSITIONS SHALL BE APPROVED BY THE CITY OF COTTONWOOD PRIOR TO RELOCATION. ALL RELOCATED ITEMS SHALL CONTINUE TO WORK IN THEIR INTENDED CAPACITY AFTER THE RELOCATION HAS BEEN ACCOMPLISHED. NO SIGNS SHALL BE RELOCATED TO POSITIONS OUTSIDE DESIGNATED RIGHTS-OF-WAY. SAFETY SHALL BE A PRIMARY CONSIDERATION IN THE PLACEMENT OF SHRUBBERY AND SIGNS WHICH COULD POSSIBLY DISRUPT THE SIGHT DISTANCE OF MOTORISTS.
36. NO JOB WILL BE CONSIDERED COMPLETE UNTIL FINAL GRADING IS COMPLETE AND ALL CURBS, PAVEMENT, AND SIDEWALKS HAVE BEEN SWEPT CLEAN OF ALL DIRT AND DEBRIS, ALL SURVEY MONUMENTS ARE INSTALLED, AND ALL VALVES, MANHOLES AND BOXES HAVE BEEN ADJUSTED TO GRADE ACCORDING TO THESE APPROVED PLANS.

CITY OF COTTONWOOD ENGINEERS NOTES

1. NOTHING CONTAINED IN THE CONTRACT DOCUMENTS SHALL CREATE, NOR SHALL BE CONSTRUED TO CREATE, ANY CONTRACTUAL RELATIONSHIP BETWEEN THE ENGINEER AND THE CONTRACTOR OR ANY SUBCONTRACTOR.
2. THE ENGINEER WILL NOT BE RESPONSIBLE FOR THE CONSTRUCTION MEANS, METHODS, TECHNIQUES, SEQUENCES, OR PROCEDURES OR FOR SAFETY PRECAUTIONS OR PROGRAMS UTILIZED IN CONNECTION WITH THE WORK, AND HE WILL NOT BE RESPONSIBLE FOR THE CONTRACTORS' FAILURE TO CARRY OUT THE WORK IN ACCORDANCE WITH THE CONTRACT DOCUMENTS.
3. A THOROUGH ATTEMPT HAS BEEN MADE TO SHOW THE LOCATIONS OF ALL UNDERGROUND OBSTRUCTIONS AND UTILITY LINES IN THE WORK AREA, HOWEVER THE CONTRACTOR SHALL BE RESPONSIBLE FOR ANY DAMAGE TO OBSTRUCTIONS AND UTILITY LINES ENCOUNTERED DURING CONSTRUCTION AND SHALL DETERMINE THE EXACT LOCATION OF UTILITIES IN THE WORK AREA.
4. THESE PLANS ARE FOR OFFICIAL USE ONLY AND MAY NOT BE SHARED WITH OTHERS EXCEPT AS REQUIRED FOR THE CONSTRUCTION OF THE PUBLIC WORKS FACILITIES SHOWN HEREON. THE PROJECT OWNER, AND THE OWNER'S LENDERS, CONSULTANTS, CONTRACTORS AND SUBCONTRACTORS ARE PROHIBITED FROM DISCLOSING THE PLANS AND SPECIFICATIONS TO ANY PERSONS OTHER THAN THOSE WHO HAVE A NEED TO KNOW THE INFORMATION FOR THE PURPOSE OF THE PROJECT.

CITY OF COTTONWOOD GRADING AND DRAINAGE NOTES

1. EXCAVATING CONTRACTOR MUST GIVE LOCATION FOR WASTING EXCESS EXCAVATION IF LOCATED WITHIN THE CITY OF COTTONWOOD AND A LETTER FROM OWNER GIVING PERMISSION FOR DUMPING PRIOR TO STARTING ON-SITE CONSTRUCTION. IF EXCESS EXCAVATION EXCEEDS 50 CUBIC YARDS AND IS DISPOSED OF ON PRIVATE PROPERTY THE DISPOSAL SITE WILL ALSO REQUIRE A GRADING AND DRAINAGE PERMIT.
2. GRADING AND DRAINAGE PLAN APPROVAL INCLUDES THE CONSTRUCTION OF ALL SURFACE IMPROVEMENTS SHOWN ON THE APPROVED PLANS.
3. ALL RAMPS MUST MEET ADA ACCESSIBILITY GUIDELINES (ADAAG) STANDARDS AND M.A.G. UNIFORM STANDARD SPECIFICATIONS AND DETAILS; 2% MAX CROSS SLOPES AND 12:1 MAX LONGITUDINAL SLOPES UNLESS DEVIATION IS SHOWN IN THESE APPROVED PLANS.
4. COMPACTION SHALL COMPLY WITH M.A.G. SECTION 601 OR AS SPECIFIED IN THESE PLANS.
5. TREES AND SHRUBBERY THAT CONFLICT WITH PROPOSED IMPROVEMENTS SHALL NOT BE REMOVED WITHOUT WRITTEN APPROVAL OF THE CITY ENGINEERING DEPARTMENT. THE CONTRACTOR SHALL BE RESPONSIBLE FOR OBTAINING AUTHORIZATION TO REMOVE AND/OR RELOCATE SAID TREES OR SHRUBBERY BY CALLING THE CITY OF COTTONWOOD ENGINEERING DEPARTMENT, INSPECTION STAFF AT (928) 634-8033.
6. SUBGRADE PREPARATION SHALL CONFORM WITH THE GEOTECHNICAL REPORT, IF APPLICABLE, FOR THIS PROJECT UNLESS OTHERWISE DIRECTED IN THESE APPROVED PLANS.
7. THE CONTRACTOR SHALL PRESERVE AND MAINTAIN CONSTRUCTION STAKING AND REFERENCE AND CONTROL POINTS UNTIL SUCH A TIME THAT THEY ARE NO LONGER REQUIRED. IN THE EVENT THAT THESE ITEMS ARE MOVED OR DESTROYED IT SHALL BE THE CONTRACTOR'S RESPONSIBILITY TO HAVE THOSE ITEMS RE-ESTABLISHED FOR LOCATION AND GRADE.
8. ALL HEADWALLS, RETAINING WALLS, OR ANY OTHER INSTANCES WHERE THERE IS A BREAK IN GRADE OF 30" OR MORE SHALL REQUIRE THE INSTALLATION OF A SAFETY RAIL PER MAG STANDARD DETAIL 145. RAILING SHALL BE PRIMED AND PAINTED AS NOTED IN THESE APPROVED PLANS.
9. THE CONTRACTOR IS RESPONSIBLE FOR LOCATING AND CONFIRMING DEPTH OF ALL EXISTING UTILITY LINES WITHIN PROPOSED RETENTION AND DRAINAGE FACILITY AREAS. IF THE DRAINAGE FACILITIES CANNOT BE CONSTRUCTED PER PLAN AS A RESULT OF CONFLICT WITH UNDERGROUND UTILITIES, THE CONTRACTOR SHOULD CONTACT THE CITY OF COTTONWOOD CITY ENGINEER AND REQUEST MODIFICATION OF THE DRAINAGE FACILITY DESIGN BY THE DESIGN ENGINEER.
10. ALL LANDSCAPE AND IRRIGATION INSTALLED WITHIN THE PUBLIC RIGHT-OF-WAY OR OTHER CITY MAINTAINED AREAS SHALL BE INSTALLED PER THE APPROVED PLANS. ALL LANDSCAPING APPROVED AS A PART OF THE SITE PLAN PROCESS SHALL BE INSTALLED PER THE APPROVED PLANS. ANY DEVIATIONS TO THE APPROVED PLANS REQUIRE CITY OF COTTONWOOD ENGINEERING DEPARTMENT APPROVAL.

CITY OF COTTONWOOD PAVING NOTES

1. COMPACTION SHALL COMPLY WITH M.A.G. SECTION 601.
2. ALL CONSTRUCTION SHALL CONFORM TO THE LATEST APPLICABLE MARICOPA ASSOCIATION OF GOVERNMENTS (MAG) UNIFORM STANDARD SPECIFICATIONS AND DETAILS OR SPECIFICALLY AS SHOWN IN THESE PLANS..
3. THE CITY OF COTTONWOOD ENGINEERING DEPARTMENT, (928) 634-8033, SHALL BE NOTIFIED 48 HOURS PRIOR TO ANY CONSTRUCTION WORK COMMENCING.
4. EXISTING OR NEWLY DAMAGED AND/OR DISPLACED CONCRETE CURB, GUTTER, SIDEWALK, OR DRIVEWAY SLABS SHALL BE REPAIRED OR REPLACED, AS NOTED BY CITY INSPECTORS, BEFORE FINAL ACCEPTANCE OF THE WORK.
5. OBSTRUCTIONS TO PROPOSED IMPROVEMENTS SHALL BE REMOVED OR RELOCATED BEFORE BEGINNING CONSTRUCTION OF THE PROPOSED IMPROVEMENTS.
6. PAVING SHALL NOT START UNTIL ALL APPROPRIATE TESTING HAS BEEN COMPLETED AND ACCEPTED BY THE CITY OF COTTONWOOD ENGINEERING DEPARTMENT.
7. THE BASE MATERIAL SHALL BE SAND AND GRAVEL, CRUSHED ROCK AND/OR DECOMPOSED GRANITE WITH ENOUGH BINDER MATERIAL SO THAT IT CAN BE TIGHTLY COMPACTED AND SHALL HAVE A PLASTICITY INDEX NOT IN EXCESS OF 6 AND SHALL CONFORM TO GRADATION AS REQUIRED BY THE CITY OF COTTONWOOD ENGINEER. THE WORK AND CONSTRUCTION SHALL BE IN ACCORDANCE WITH SECTION 702 OF M.A.G. STANDARD SPECIFICATIONS.
8. BASE MATERIAL SHALL BE PLACED IN UNIFORM LAYERS NOT TO EXCEED 6" IN DEPTH. EACH LAYER SHALL BE BLADED TO A SMOOTH SURFACE CONFORMING TO THE CROSS SECTION SHOWN ON THE PLANS AND SHALL BE WATERED AND THOROUGHLY ROLLED IN A MANNER SATISFACTORY TO THE CITY OF COTTONWOOD.
9. ASPHALT AND CONCRETE REQUIREMENTS SHALL BE IN ACCORDANCE WITH SECTION 409 OF ADOT STANDARD SPECIFICATIONS OR SECTION 321 OF M.A.G. STANDARD SPECIFICATIONS. MIX DESIGN SHALL BE SUBMITTED TO THE CITY OF COTTONWOOD ENGINEER FOR REVIEW AND APPROVAL.
10. ASPHALTIC CONCRETE SHALL BE COMPACTED TO NOT LESS THAN 95.0 PERCENT OF LABORATORY DENSITY. THE LABORATORY DENSITY WILL BE DETERMINED BY THE CONTRACTOR'S ENGINEER BASED UPON FIELD SAMPLES IN ACCORDANCE WITH THE REQUIREMENTS OF AASHTO T-245, 75 BLOW MARSHALL DENSITY.
11. CORE SAMPLES SHALL BE TAKEN BY THE CONTRACTOR AT RANDOM LOCATIONS IN ACCORDANCE WITH QUALITY CONTROL TESTING.
12. WHEN THE AVERAGE PERCENT OF COMPACTION IS LESS THAN 95.0%, THE CONTRACTOR WILL BE REQUIRED TO REMOVE AND REPLACE ANY PORTIONS, AT THE SOLE DISCRETION OF THE CITY OF COTTONWOOD ENGINEER.
13. ALL NEW STREETS SHALL BE CHIP SEALED, UNLESS OTHERWISE DIRECTED, PER THE FOLLOWING SPECIFICATION:
    A. THE CHIP SEAL COAT SHALL CONSIST OF EMULSIFIED ASPHALT, TYPE CRS-2, (OR EQUIVALENT) APPLIED AT A RATE OF 0.30 TO 0.40 GALLONS PER SQUARE YARD AND 3/8" INCH CHIP COVER AGGREGATE. EMULSIFIED ASPHALT SHALL BE APPLIED TO THE SURFACE OF THE ROAD IN ACCORDANCE WITH SECTION 404-3.05 OF THE ADOT STANDARD SPECIFICATIONS. EMULSIFIED ASPHALT, TYPE CRS-2 OR EQUIVALENT SHALL CONFORM TO SECTION 1005-3.03 AND TABLE 1005-5 OF ADOT STANDARD SPECIFICATIONS.
14. CHIP SEAL COAT SHALL NOT BE APPLIED FOR A MINIMUM OF 14 DAYS AFTER COMPLETION OF THE ASPHALTIC CONCRETE.
15. THE COVER MATERIAL SHALL CONFORM TO SECTION 404-2.02 TO THE FOLLOWING GRADATION AND SHALL BE AN AGGREGATE MIX OF CLEAN SAND, GRAVEL OR CRUSHED ROCK AND SHALL BE FREE OF LUMPS OR BALLS OF CLAY, CONTAIN NO CALCAREOUS, CLAY OR DUST COATINGS, CALICHE, SYNTHETIC MATERIALS, DECOMPOSED GRANITE, VOLCANIC CINDERS, ORGANIC MATTER, OR FOREIGN SUBSTANCES. IF A CLEAN COVER MATERIAL CANNOT BE ACHIEVED USING CONVENTIONAL CRUSHING AND SCREENING METHODS, THEN THE COVER MATERIAL WILL HAVE TO BE WASHED IN WATER. THE COVER MATERIAL SHALL BE APPLIED AT A RATE OF 25 TO 30 POUNDS PER SQUARE YARD.
16. THE GRADING SHALL MEET THE FOLLOWING REQUIREMENTS WHEN TESTED IN ACCORDANCE WITH THE REQUIREMENTS OF ARIZONA TEST METHOD 201.

SIEVE SIZE	% BY WEIGHT PASSING SIEVES
NO. 4	0-25
NO. 8	0-5
NO 200	0-2

17. THE CONTRACTOR IS RESPONSIBLE FOR ALL LABORATORY TEST AND CERTIFICATIONS TO ASSURE THAT THE CHIP MATERIAL IS IN CONFORMANCE TO THE REQUIREMENTS SET FORTH IN THESE SPECIFICATIONS.
18. REPRESENTATIVE SAMPLES OF THE AGGREGATE COVER MATERIAL SHALL BE TAKEN DAILY, AND THE LABORATORY TEST RESULTS AND CERTIFICATES OF COMPLIANCE, CERTIFIED BY THE CONTRACTOR'S ENGINEER, SHALL BE SUBMITTED TO THE CITY OF COTTONWOOD ENGINEER. THE CITY OF COTTONWOOD ENGINEER MAY REJECT DELIVERED CHIP MATERIAL IF, IN HIS OPINION, THE DELIVERED MATERIAL DIFFERS SIGNIFICANTLY FROM THE REPRESENTATIVE SAMPLE.
19. THE CONTRACTOR SHALL BE RESPONSIBLE FOR SUCCESSFUL PLACEMENT OF THE CHIP SEAL COAT REGARDLESS OF TEMPERATURES OF MATERIAL COMPLIANCE, AND SHALL GUARANTEE THE SUCCESS OF THE CHIP SEAL COAT PER MAG SPECIFICATION SECTION 330. THE CONTRACTOR SHALL COMPLY WITH ALL ADOT STANDARDS AND SPECIFICATIONS 404-3.14 FOR DATES AND ELEVATIONS OF PLACEMENT.
20. THE CONTRACTOR SHALL HAVE EACH INDIVIDUAL ROAD SWEPT WITHIN 24 HOURS OF THE COMPLETION OF THE CHIP SEAL. THE CONTRACTOR SHALL MAINTAIN TRAFFIC CONTROL AND LOOSE GRAVEL SIGNS UNTIL ALL SWEEPING HAS BEEN COMPLETED.
21. BLOTTING SHALL BE DONE WHEREVER AND WHENEVER NECESSARY, WITH A MATERIAL APPROVED BY THE CITY OF COTTONWOOD ENGINEER. ALL EXCESS BLOTTER MATERIAL SHALL BE SWEPT AWAY AND SURFACE OF THE BITUMINOUS ROADWAY SHALL BE REASONABLY CLEAN AND FREE OF ALL LOOSE MATERIAL BEFORE THE SEAL COAT MAY BE APPLIED.

CITY OF COTTONWOOD STRIPING, SIGNAGE, & TRAFFIC CONTROL NOTES

1. THE CONTRACTOR SHALL NOTIFY THE CITY OF COTTONWOOD ENGINEERING DEPARTMENT, INSPECTION STAFF AT LEAST 48-HOURS IN ADVANCE OF ANY SIGNING OR STRIPING AT (928) 634-8033. SIGNING OR STRIPING COMPLETED PRIOR TO THE CITY'S INSPECTION SHALL BE REMOVED IF IT IS NOT CONSISTENT WITH CITY STANDARDS.
2. THE OBLITERATION OF CONFLICTING STRIPING SHALL BE ACCOMPLISHED BY WATER BLASTING OR OTHER METHODS APPROVED BY THE CITY OF COTTONWOOD ENGINEERING DEPARTMENT.
3. ON NEW ASPHALT SURFACES AND SEAL TREATMENTS, ALL STRIPING AND LEGENDS (EXCEPT BIKE LANE SYMBOLS) SHALL BE INSTALLED USING WATER-BASED PAINT AS A TEMPORARY MEASURE. PERMANENT MARKINGS SHALL BE INSTALLED NO SOONER THAN 30-DAYS FOLLOWING THE FINAL ASPHALT OR SEAL APPLICATION.
4. CROSSWALKS, STOP BARS, CHEVRON, CROSSHATCH, MARKING INSTALLATIONS SHALL BE DONE IN ACCORDANCE WITH THE MAG STANDARDS. ALKYD THERMOPLASTIC MATERIAL APPLIED AT 90 MIL THICKNESS OR 3M STAMARK PAVEMENT MARKING TAPE SERIES 270 ES OR APPROVED EQUAL. WORD SYMBOL AND LEGEND MARKING INSTALLATIONS SHALL BE DONE IN 3M STAMARK PAVEMENT MARKING TAPE.
5. SIGNING SHALL BE INSTALLED PER CITY OF COTTONWOOD STANDARDS AND THESE APPROVED PLANS.
6. ALL SIGN BLANKS SHALL BE .080 GAUGE ALUMINUM, UNLESS OTHERWISE NOTED.
7. ALL SIGNS SHALL BE ASTM TYPE IV HIGH INTENSITY SHEETING, UNLESS OTHERWISE NOTED.
8. ALL SIGNS SHALL BE PROVIDED AND INSTALLED BY THE CONTRACTOR PER THESE APPROVED PLANS.
9. THE CONTRACTOR SHALL RETURN ALL REMOVED TRAFFIC SIGNS TO THE CITY OF COTTONWOOD PUBLIC WORKS DEPARTMENT, 1480 WEST MINGUS AVENUE. CONTACT THE PUBLIC WORKS OFFICE AT (928) 634-8033.
10. SIGNING AND STRIPING INSTALLATIONS SHALL BE IN ACCORDANCE WITH THE CURRENT EDITION OF THE MANUAL ON UNIFORM TRAFFIC CONTROL DEVICES (MUTCD).
11. UNLESS OTHERWISE NOTED, ALL DIMENSIONS ARE TO THE BACK OF CURB AND

CITY OF COTTONWOOD EROSION CONTROL NOTES

1. A COPY OF THE APPROVED GRADING AND DRAINAGE PLANS FOR THIS PROJECT, TOGETHER WITH A COPY OF THE NOTICE OF INTENT (NOI) AND THE STORM WATER MANAGEMENT PLANS, SHALL BE MAINTAINED ON THE SITE AND AVAILABLE FOR REVIEW. THOSE ELEMENTS OF THE GRADING AND DRAINAGE PLAN PERTINENT TO OR REFERENCED ON THE SWMP SHALL BE CONSIDERED A PART OF THE SWMP.
2. THE CITY OF COTTONWOOD ENGINEERING DEPARTMENT, INSPECTION STAFF, SHALL BE NOTIFIED 48 HOURS BEFORE ANY ON-SITE AND/OR OFF-SITE CONSTRUCTION BEGINS, AT (928) 634-8033.
3. THE CONTRACTOR SHALL BE RESPONSIBLE FOR MAINTAINING DUST CONTROL MEASURES. THE CONTRACTOR SHALL ONLY USE RECLAIMED WATER FOR COMPACTION AND DUST CONTROL. RECLAIM WATER PURCHASE IS AVAILABLE BY CONTACTING THE CITY OF COTTONWOOD UTILITIES DEPARTMENT (928) 634-0186.
4. THE CONTRACTOR SHALL PERFORM, AT A MINIMUM, A VISUAL INSPECTION OF THE CONSTRUCTION SITE ONCE EVERY MONTH AND WITHIN 24 HOURS OF A RAINFALL GREATER THAN OR EQUAL TO A HALF OF AN INCH OR MORE. THE CONTRACTOR SHALL PREPARE A REPORT DOCUMENTING HIS/HER FINDINGS ON THE CONDITIONS OF THE SWMP CONTROLS AND NOTE ANY PROBLEM AREAS. THE CONTRACTOR'S REPORT IS TO BE SUBMITTED TO THE CITY OF COTTONWOOD ENGINEERING DEPARTMENT, INSPECTION STAFF, FOR REVIEW AND APPROVAL. FACILITIES SHALL BE MAINTAINED AS NECESSARY TO ENSURE THEIR CONTINUED FUNCTIONING. IN ADDITION, ALL TEMPORARY SILTATION CONTROLS SHALL BE MAINTAINED IN A SATISFACTORY CONDITION UNTIL SUCH TIME THAT CLEARING AND/OR CONSTRUCTION IS COMPLETED, PERMANENT DRAINAGE FACILITIES ARE OPERATIONAL, AND THE POTENTIAL FOR EROSION HAS PASSED.
5. THE CONTRACTOR SHALL AMEND THE SWPPP AS NECESSARY DURING THE COURSE OF CONSTRUCTION TO RESOLVE ANY PROBLEM AREAS, WHICH BECOME EVIDENT DURING THE CONSTRUCTION AND/OR DURING RAINFALLS.
6. THE PERMITTEE SHALL FILE A NOTICE OF TERMINATION (N.O.T.) AFTER COMPLETION OF CONSTRUCTION AND PLACEMENT OF FINAL LANDSCAPE MATERIALS. THE N.O.T. IS TO BE SUBMITTED TO THE CITY OF COTTONWOOD ENGINEERING DEPARTMENT, INSPECTION STAFF, TO FINAL THE SWMP PERMIT.
7. THE PERMITTEE SHALL SAVE ALL RECORDS, INCLUDING THE N.O.I., SWMP, N.O.T., AND INSPECTION REPORTS ON FILE FOR A MINIMUM OF THREE YEARS FROM THE DATE OF FILING THE N.O.T. UNLESS A WAIVER HAS BEEN OBTAINED THROUGH ADEQ.
8. THE IMPLEMENTATION OF THESE PLANS AND THE CONSTRUCTION, MAINTENANCE, REPLACEMENT, AND UPGRADING OF THESE FACILITIES IS THE RESPONSIBILITY OF THE PERMITTEE/CONTRACTOR UNTIL ALL CONSTRUCTION IS APPROVED AND THE N.O.T. IS SUBMITTED TO THE CITY OF COTTONWOOD ENGINEERING DEPARTMENT, INSPECTION STAFF.
9. THE FACILITIES SHOWN ON THIS PLAN MUST BE CONSTRUCTED IN CONJUNCTION WITH ALL CLEARING AND GRADING ACTIVITIES IN SUCH A MANNER AS TO ENSURE THAT SEDIMENT-LADEN WATER DOES NOT ENTER THE DRAINAGE SYSTEM OR VIOLATE APPLICABLE WATER STANDARDS, AND MUST BE INSTALLED AND OPERATIONAL PRIOR TO ANY GRADING OR LAND CLEARING. WHEREVER POSSIBLE, MAINTAIN NATURAL VEGETATION FOR SILT CONTROL.
10. PLAN APPROVAL IS FOR 180 DAYS. PRIOR TO PLAN APPROVAL EXPIRATION, ALL ASSOCIATED PERMITS SHALL BE PURCHASED OR THE PLANS SHALL BE RESUBMITTED FOR EXTENSION OF PLAN APPROVAL.
11. IN AREAS REQUIRING SEEDING AS NOTED ON THESE APPROVED PLANS THE CONTRACTOR SHALL FOLLOW THE SPECIFICATIONS GIVEN IN SECTION 805 OF THE ADOT ROADSIDE DEVELOPMENT CONSTRUCTION MANUAL.
12. ALL LANDSCAPE PROJECTS REQUIRING CITY MAINTENANCE OR WITHIN THE CITY RIGHT-OF-WAY SHALL BE INSPECTED FOR THE FOLLOWING:
    A. PLANT LOCATIONS: THESE LOCATIONS SHALL BE STAKED IN THE FIELD WITH IDENTIFICATION AS TO TREES OR SHRUBS; OR HOLES FOR THE PLANT MATERIALS MAY BE DUG WITH IDENTIFICATION OF PLANT TYPE. USE OF THIS METHOD DOES NOT RELIEVE THE CONTRACTOR OF ANY PLANT RELOCATIONS MADE BY THE CITY.
    B. IRRIGATION INSTALLATION: INSPECTIONS SHALL BE MADE AT THE POINT THE IRRIGATION SYSTEM IS INSTALLED. INSPECTIONS OF THE PIPE DEPTH, AUTOMATIC VALVE INSTALLATION AND EMITTER/SPRAY INSTALLATIONS WILL BE MADE.
    C. SUBSTANTIAL COMPLETION: AN INSPECTION AT COMPLETION OF THE LANDSCAPE AND IRRIGATION INSTALLATION WILL BE MADE. ANY DEFICIENCIES IN THE INSTALLATION WILL BE NOTED AND CORRECTED BY THE CONTRACTOR DURING THE MAINTENANCE PERIOD.
    D. FINAL ACCEPTANCE: A FINAL INSPECTION IS REQUIRED PRIOR TO CITY ACCEPTANCE OF THE LANDSCAPE AND IRRIGATION IMPROVEMENTS. THE ABOVE INSPECTIONS REQUIRE A MINIMUM OF 48-HOURS PRIOR NOTIFICATION TO THE CITY. CALL THE CITY OF COTTONWOOD ENGINEERING DEPARTMENT, INSPECTION STAFF AT (928) 634-8033 TO ARRANGE FOR THESE INSPECTIONS.
13. ALL PLANTINGS AT MATURITY SHALL MAINTAIN A MINIMUM 6'-0" CLEARANCE AROUND ALL FIRE HYDRANTS AND FIRE SUPPRESSION DEVICES.
14. ALL PLANTING AREAS (EXCEPT TURF AREAS) TO BE MAINTAINED BY THE CITY SHALL BE TREATED WITH A PRE-EMERGENT HERBICIDE BY A LICENSED APPLICATOR PRIOR TO AND AFTER THE PLACEMENT OF THE DECOMPOSED GRANITE, RIVER ROCK ETC. APPLICATION DOCUMENTATION WILL BE REQUIRED PRIOR TO ACCEPTANCE OF THE LANDSCAPING BY THE CITY.

CITY OF COTTONWOOD SANITARY SEWER NOTES

1. ALL FRAMES, COVERS, CLEAN-OUTS, AND MANHOLES SHALL BE ADJUSTED TO FINISH GRADE UPON COMPLETION OF PAVING OR RELATED CONSTRUCTION PER MAG DETAIL #422.
2. ALL SERVICE CONNECTIONS SHALL ALSO BE STAKED PER MAG STANDARD DETAIL #440, AT THE PROPERTY END OF THE SERVICE LATERAL.
3. INSULATED TRACER WIRE (BRIGHT GREEN COATED, #12, SOLID COPPER) SHALL BE PLACED UNDER MANHOLE FRAMES AND CLEANOUTS AND EXTEND ALONG MAINS AND LATERALS. ALL SPLICES SHALL BE WATER TIGHT. THAT TRACER WIRE IS INSTALLED UNDER THE CENTER LINE OF THE PIPE AND IS NOT DAMAGED DURING CONSTRUCTION. BEFORE ACCEPTANCE FOR THE JOB TRACER WIRE WILL BE CHECKED FOR CONTINUITY. DAMAGED WIRE WILL BE REPAIRED AT THE CONTRACTOR'S EXPENSE.
4. SEWER CASTINGS SHALL BE MANUFACTURED IN NORTH AMERICA (UNLESS AUTHORIZED BY THE CITY) AND APPROVED SPECIFICALLY BY THE CITY OF COTTONWOOD ENGINEERING DEPARTMENT, INSPECTION SECTION.
5. THE CONTRACTOR IS RESPONSIBLE TO SCHEDULE AND PAY FOR VIDEO INSPECTION OF ALL PUBLIC SANITARY SEWER MAINLINES PER ORDINANCE NO. 362.
6. SANITARY SEWER PIPE AND MANHOLES SHALL BE TESTED ACCORDING TO THE FOLLOWING STANDARDS:
    A. MANHOLE TESTING THE CONTRACTOR SHALL TEST 100% OF THE MANHOLES USING THE FOLLOWING TEST PROTOCOL:
        1. AIR PRESSURE TESTING USING THE "STANDARD TEST METHOD FOR CONCRETE SEWER MANHOLES BY NEGATIVE AIR PRESSURE (VACUUM) TEST," (PUBLISHED BY THE AMERICAN SOCIETY FOR TESTING AND MATERIALS, (C 1244-93), APPROVED AUGUST 15, 1993.
        2. THE CONTRACTOR SHALL PERFORM MANHOLE TESTING AFTER INSTALLATION OF THE MANHOLE CONE TO VERIFY WATERTIGHTNESS OF THE MANHOLE FROM THE TOP OF THE CONE DOWN. UPON SATISFACTORY TEST RESULTS, THE CONTRACTOR SHALL INSTALL THE MANHOLE RING AND ANY SPACERS, COMPLETE THE JOINTS, AND SEAL THE MANHOLE TO A WATERTIGHT CONDITION. IF THE MANHOLE CONE, SPACERS, AND RING CAN BE INSTALLED TO FINAL GRADE WITHOUT DISTURBANCE OR ADJUSTMENT BY LATER CONSTRUCTION, THE CONTRACTOR MAY PERFORM THE TESTING FROM THE TOP OF THE MANHOLE RING DOWN.
    B. LEAKAGE TESTING THE CONTRACTOR SHALL TEST EACH SEGMENT OF THE SEWER LINE (100%) FOR LEAKAGE USING THE APPLICABLE METHOD BELOW AND RECORD THE RESULTS:
        1. "STANDARD TEST METHOD FOR INSTALLATION OF ACCEPTANCE OF PLASTIC GRAVITY SEWER LINES USING LOW-PRESSURE AIR" PUBLISHED BY THE AMERICAN SOCIETY FOR TESTING AND MATERIALS, (F1417-92), RE-APPROVED 1998;
    C. THE CONTRACTOR SHALL PERFORM A DEFLECTION TEST OF THE TOTAL LENGTH (100%) OF ALL SEWER LINES MADE OF FLEXIBLE MATERIALS TO ENSURE THAT THE INSTALLATION MEETS OR EXCEEDS THE MANUFACTURER'S RECOMMENDATIONS AND RECORD THE RESULTS.
    D. ANY PART OF THE INSTALLATION WHICH SHOWS DEFLECTION IN EXCESS OF 5% OF THE NOMINAL INSIDE DIAMETER PER MAG SECTION 738 OR IN EXCESS OF 5% OF THE AVERAGE INSIDE DIAMETER PER ASTM D-3034 FOR PVC PIPE SHALL BE CORRECTED.
    E. UNIFORM SLOPE THE CONTRACTOR SHALL TEST THE TOTAL LENGTH (100%) OF THE SEWER LINE FOR UNIFORM SLOPE BY VISUALLY INSPECTING THE INTERIOR OF THE SEWER LINE USING A TELEVISION CAMERA AND RECORD THE RESULTS. THE CONTRACTOR SHALL COORDINATE THE TESTING WITH THE CITY OF COTTONWOOD.
7. SDR 21 AND 26 PVC PIPE AND DUCTILE IRON PIPE WITH SPECIAL SEWER COATINGS ARE ALLOWED MATERIALS PER ORDINANCE No. 371
8. A SEWER LATERAL CLEANOUT SHALL BE PROVIDED AT THE EDGE OF RIGHT OF WAY PER M.A.G. STANDARD DETAIL 440.3.
9. TRENCH BOTTOM SHALL BE COMPACTED BY SUITABLE MEANS PER THE PIPE BEDDING AND TRENCH DETAIL IN THESE APPROVED PLANS. THE INSTALLATION AND ASSEMBLY OF THE PROPOSED PIPE AND FITTINGS IN THE TRENCH ATOP THE TRENCH BOTTOM BEDDING. THIS WILL INCLUDE BUT NOT BE LIMITED TO INSPECTING THAT BEDDING HAS BEEN HAND REMOVED BELOW BELLS FOR FLUSH FIT ATOP TRENCH BOTTOM BEDDING, THAT PIPE ENDS HAVE BEEN MARKED AND THEN INSERTED INTO BELL ENDS FOR THE APPROPRIATE DEPTHS, THAT FITTINGS AND PIPE ARE PROPERLY ALIGNED AND BOLTED TOGETHER AS REQUIRED, THAT TRACING WIRE IS INSTALLED AS REQUIRED, THAT ALL DUCTILE IRON FITTINGS AND PIPE ARE WRAPPED AS REQUIRED, AND THAT ALL ITEMS ARE REASONABLY CENTERED IN THE TRENCH SO THAT BEDDING MATERIAL CAN BE PLACED ALONG THE SIDES OF THE PIPE AS REQUIRED BY THE PIPE BEDDING AND TRENCH DETAIL IN THE APPROVED PLANS.
10. "BURIED SEWER LINE" LABELED METALLIC DETECTOR TAPE SHALL BE INSTALLED PROPERLY ATOP THE FIRST COMPACTED LIFT OF NATIVE MATERIAL ABOVE THE TOP OF PIPE BEDDING AND DIRECTLY ABOVE THE CENTERLINE OF THE BURIED SEWER LINE.
11. NATIVE BACKFILL USED ABOVE THE BEDDING SHALL BE CAREFULLY PROCESSED TO REMOVE ALL ROCK LARGER THAN 3" DIAMETER AND OBTAIN THE APPROPRIATE MOISTURE AND THEN CAREFULLY PLACED IN EVEN AND UNIFORM LIFTS IN THE TRENCH AND COMPACTED TO THE DENSITY REQUIRED TO SATISFY BOTH MAG SPECIFICATIONS IN SECTION 601 AND ARIZONA DEPARTMENT OF TRANSPORTATION REQUIREMENTS FOR WORK IN THEIR RIGHT-OF-WAY. THE ALLOWABLE DEPTH OF LIFT WILL BE DETERMINED BY THE CAPABILITIES OF THE COMPACTION EQUIPMENT PROVIDED BY THE CONTRACTOR. DENSITIES OF TRENCH BACKFILL WILL BE CHECKED BY CITY OF COTTONWOOD UTILITY ENGINEER OR DESIGNEE AT THE FOLLOWING VERTICAL AND HORIZONTAL INTERVALS:

TABLE #1

MATERIAL/LOCATION	TEST INTERVAL-VERT.*	TEST INTERVAL-HORIZ.*
PIPE BEDDING BASE	TOP OF LIFT	EVERY 350' OR DAILY (WHICHEVER IS LESS)
PIPE BEDDING	12" ABOVE TOP OF PIPE AND AT TOP OF BEDDING	EVERY 350' OR DAILY (WHICHEVER IS LESS)
TRENCH BACKFILL ABOVE BEDDING	EVERY 18" OF VERTICAL FILL	EVERY 350' OR DAILY (WHICHEVER IS LESS)
TRENCH BACKFILL IN DRIVEWAYS	EVERY LIFT	AT EVERY DRIVEWAY LOCATION

12. WHERE CULVERTS OR DRAINAGE PIPES CROSS GRAVITY SEWERS, PRESSURE SEWERS, OR WATER MAINS, A MINIMUM OF TWO FOOT OF VERTICAL SEPARATION SHALL BE MAINTAINED BETWEEN THE TWO PIPES PER MAG STANDARD DETAIL 404.
13. WATER AND SEWER MAINS SHALL BE SEPARATED IN ORDER TO PROTECT PUBLIC WATER SYSTEMS FROM POSSIBLE CONTAMINATION. ALL DISTANCES ARE MEASURED PERPENDICULARLY FROM THE OUTSIDE OF THE SEWER MAIN TO THE OUTSIDE OF THE WATER MAIN. SEPARATION REQUIREMENTS ARE AS FOLLOWS:
14. A SEWER MAIN SHALL NOT BE PLACED:
    A. WITHIN SIX FEET, HORIZONTAL DISTANCE, AND BELOW TWO FEET, VERTICAL DISTANCE, ABOVE THE TOP OF A SEWER MAIN UNLESS EXTRA PROTECTION IS PROVIDED. EXTRA PROTECTION SHALL CONSIST OF CONSTRUCTING THE SEWER MAIN WITH MECHANICAL JOINT DUCTILE IRON PIPE OR WITH SLIP-JOINT DUCTILE IRON PIPE IF JOINT RESTRAINT IS PROVIDED. ALTERNATE EXTRA PROTECTION SHALL CONSIST OF ENCASING BOTH THE WATER AND SEWER MAINS IN AT LEAST SIX INCHES OF CONCRETE FOR AT LEAST TEN FEET BEYOND THE AREA OF CROSSING.
    B. WITHIN TWO FEET HORIZONTALLY AND TWO FEET BELOW THE WATER MAIN.
15. NO WATER PIPE SHALL PASS THROUGH OR COME INTO CONTACT WITH ANY PART OF A SEWER MANHOLE. THE MINIMUM HORIZONTAL SEPARATION BETWEEN WATER MAINS AND MANHOLES SHALL BE SIX FEET, MEASURED FROM THE CENTER OF THE MANHOLE.
16. THE MINIMUM SEPARATION BETWEEN FORCE MAINS OR PRESSURE SEWERS AND WATER MAINS SHALL BE TWO FEET VERTICALLY AND SIX FEET HORIZONTALLY UNDER ALL CONDITIONS. WHERE A SEWER FORCE MAIN CROSSES ABOVE OR LESS THAN SIX FEET BELOW A WATER LINE, THE SEWER MAIN SHALL BE ENCASED IN AT LEAST SIX INCHES OF CONCRETE OR CONSTRUCTED USING MECHANICAL JOINT DUCTILE IRON PIPE FOR TEN FEET ON EITHER SIDE OF THE WATER MAIN.
17. THE SEPARATION REQUIREMENTS DO NOT APPLY TO BUILDING, PLUMBING, OR INDIVIDUAL HOUSE SERVICE CONNECTIONS.
18. THE CONTRACTOR SHALL UNCOVER ALL EXISTING SEWER LINES TO BE CONNECTED AND VERIFY INVERT ELEVATIONS BEFORE ANY OTHER CONSTRUCTION.
19. ALL SEWER SERVICE LATERALS REQUIRE THE INSTALLATION OF CLEAN-OUTS PER MAG STANDARD DETAIL 440-3 AND A CURB STAMP PER MAG STANDARD DETAIL 440-4. CUL-DE-SACS AND OTHER LOCATIONS, AS DIRECTED BY THE CITY WILL REQUIRE THE USE OF DOUBLE CLEAN-OUTS PER MAG STANDARD DETAIL 440-2 AND A CURB STAMP PER MAG STANDARD DETAIL 440-4.
20. ALL SEWER MANHOLE CONNECTIONS SHALL BE INSTALLED WITH A GASKET, JOINT SEALER, OR WATER STOP BETWEEN THE BASE AND RISER SECTION.
21. ALL MANHOLES AND COMPONENTS SHALL BE CONSTRUCTED OF CLASS A CONCRETE IN CONFORMANCE WITH MAG STANDARD SPECIFICATION SECTION 725.
22. CONTRACTOR SHALL MANDREL, AIR PRESSURE TEST, AND PROVIDE A CLOSED CIRCUIT TELEVISION (CCTV) INSPECTION IN ACCORDANCE WITH NASSCO PIPELINE ASSESSMENT CERTIFICATION PROGRAM. THE CCTV INSPECTION SHOULD BE PROVIDED IN DIGITAL (DVD) FORMAT UTILIZING A MEASURING DEVICE AHEAD OF THE CAMERA TO IDENTIFY DEFLECTIONS IN THE LINE. THE MEASURING DEVICE SHALL BE ABLE TO MEASURE WATER DEPTH FROM 0 TO 2 INCHES IN ¼" INCH INCREMENTS. CONTRACTOR SHALL PERFORM TESTS AFTER DRY UTILITIES ARE INSTALLED AND PRIOR TO ANY CONCRETE WORK, STREET WORK, OR FINAL ACCEPTANCE OF THE SEWER.
23. SEWER LINES SHALL REMAIN "PLUGGED" AT THE POINT(S) OF CONNECTION TO EXISTING LINES (OUTFALLS) UNTIL ALL PHASES OF THE PROJECT HAVE BEEN ACCEPTED BY THE CITY OF COTTONWOOD ENGINEERING DEPARTMENT, INSPECTION STAFF.
24. NO FLOW SHALL BE RELEASED INTO THE CITY SANITARY SEWER UNTIL AFTER ALL TESTS HAVE BEEN PASSED AND APPROVED BY THE CITY OF COTTONWOOD ENGINEERING DEPARTMENT, INSPECTION STAFF.
25. ALL PAVEMENT REPLACEMENT SHALL CONFORM TO MAG STANDARD DETAIL 200 WITH A "T-TOP" MODIFIED WITH A ONE SACK PORTLAND CEMENT ABC SLURRY, WHICH CONFORMS TO MAG STANDARD SPECIFICATION 728, FOR TRENCH BACKFILL FROM TOP OF BEDDING ABOVE THE TOP OF PIPE TO THE EXISTING PAVEMENT SUBGRADE. PAVEMENT REPLACEMENT THICKNESS SHALL BE AS SPECIFIED ON THESE APPROVED PLANS.
26. THE CONTRACTOR IS RESPONSIBLE TO NOTIFY THE ENGINEER OF RECORD BEFORE THE SEWER LINE IS BACKFILLED SO "AS-BUILT" MEASUREMENTS MAY BE TAKEN. ANY CHANGES TO THE APPROVED PLANS MUST BE AUTHORIZED BY THE ENGINEER OF RECORD AND THE CITY OF COTTONWOOD ENGINEERING DEPARTMENT, INSPECTION STAFF, BEFORE THE CHANGE IS MADE IN THE FIELD.

CITY OF COTTONWOOD WATERMAIN NOTES

1. ALL PROJECT MATERIALS AND WORKMANSHIP SHALL COMPLY WITH THE "MARICOPA ASSOCIATION OF GOVERNMENTS (MAG) STANDARD SPECIFICATIONS AND DETAILS FOR PUBLIC WORKS CONSTRUCTION" AND THESE COTTONWOOD MUNICIPAL WATER SYSTEMS (CMWS) STANDARDS AND SPECIFICATIONS, THE APPROVED CONSTRUCTION PLANS AND SPECIFICATIONS, TOGETHER WITH GENERALLY ACCEPTED GOOD CONSTRUCTION PRACTICES.
2. THE CITY OF COTTONWOOD ENGINEERING DEPARTMENT, INSPECTION STAFF, WILL CONDUCT INSPECTIONS OF ALL OF THE PROPOSED IMPROVEMENTS. THESE REQUIRED INSPECTIONS WILL INCLUDE BUT NOT BE LIMITED TO THE FOLLOWING:
    A. PRE-EXCAVATION LOCATION OF THE PROPOSED TRENCH AND ANY PROPOSED SAW-CUTTING OF ASPHALT OR CONCRETE. VERIFICATION OF BLUE-STAKE COMPLETION WILL ALSO BE DONE AT THIS TIME.
    B. EXCAVATED DEPTH AND TRENCH SUBGRADE PREPARATION. ANY CROSSED UTILITIES (PUBLIC OR PRIVATE) WILL BE INSPECTED AT THIS TIME TO ASSURE NO DAMAGE OCCURRED DURING EXCAVATION. THE CONTRACTOR SHALL BE RESPONSIBLE TO OVERSEE THE REPAIR OF ANY DAMAGE TO ANY UTILITY THAT OCCURRED FROM THE EXCAVATION, CONSTRUCTION, AND BACKFILL OF THE PROPOSED WATERLINE TO THE SATISFACTION OF THAT RELATIVE UTILITY.
    C. THE PLACEMENT OF TRENCH BOTTOM BEDDING INCLUDING QUALITY OF MATERIALS, THICKNESS, MOISTURE, AND COMPACTION IN ACCORDANCE TO THE PIPE BEDDING AND TRENCH DETAIL IN THE APPROVED PLANS.
    D. THE INSTALLATION AND ASSEMBLY OF THE PROPOSED PIPE AND FITTINGS IN THE TRENCH ATOP THE TRENCH BOTTOM BEDDING. THIS WILL INCLUDE BUT NOT BE LIMITED TO INSPECTING THAT BEDDING HAS BEEN HAND REMOVED BELOW BELLS FOR FLUSH FIT ATOP TRENCH BOTTOM BEDDING, THAT PIPE ENDS HAVE BEEN MARKED AND THEN INSERTED INTO BELL ENDS FOR THE APPROPRIATE DEPTHS, THAT FITTINGS AND PIPE ARE PROPERLY ALIGNED AND BOLTED TOGETHER AS REQUIRED, THAT TRACING WIRE IS INSTALLED AS REQUIRED, THAT ALL DUCTILE IRON FITTINGS AND PIPE ARE WRAPPED AS REQUIRED, AND THAT ALL ITEMS ARE REASONABLY CENTERED IN THE TRENCH SO THAT BEDDING MATERIAL CAN BE PLACED ALONG THE SIDES OF THE PIPE AS REQUIRED BY THE PIPE BEDDING AND TRENCH DETAIL IN THE APPROVED PLANS.
    E. THAT THE WATERLINE AND FITTINGS ARE APPROPRIATELY BEDDED AROUND AND OVER AS REQUIRED BY THE PIPE BEDDING AND TRENCH DETAIL IN THE APPROVED PLANS INCLUDING QUALITY OF BEDDING MATERIAL, WIDTH/THICKNESS, MOISTURE, AND COMPACTION PER TABLE #1 BELOW.
    F. THAT TRACER WIRE IS INSTALLED UNDER THE CENTER LINE OF THE PIPE AND IS NOT DAMAGED DURING CONSTRUCTION. BEFORE ACCEPTANCE FOR THE JOB TRACER WIRE WILL BE CHECKED FOR CONTINUITY. DAMAGED WIRE WILL BE REPAIRED AT THE CONTRACTOR'S EXPENSE.
    G. THAT "BURIED WATERLINE" LABELED DETECTOR TAPE IS INSTALLED PROPERLY ATOP THE FIRST COMPACTED LIFT OF NATIVE MATERIAL ABOVE THE TOP OF PIPE BEDDING AND DIRECTLY ABOVE THE CENTERLINE OF THE BURIED WATERLINE.
    H. THAT NATIVE BACKFILL USED ABOVE THE BEDDING IS CAREFULLY PROCESSED TO REMOVE ALL ROCK LARGER THAN 3" DIAMETER AND OBTAIN THE APPROPRIATE MOISTURE AND THEN CAREFULLY PLACED IN EVEN AND UNIFORM LIFTS IN THE TRENCH AND COMPACTED TO THE DENSITY REQUIRED TO SATISFY BOTH MAG SPECIFICATIONS IN SECTION 601 AND ARIZONA DEPARTMENT OF TRANSPORTATION REQUIREMENTS FOR WORK IN THEIR RIGHT-OF-WAY. THE ALLOWABLE DEPTH OF LIFT WILL BE DETERMINED BY THE CAPABILITIES OF THE COMPACTION EQUIPMENT PROVIDED BY THE CONTRACTOR. DENSITIES OF TRENCH BACKFILL WILL BE CHECKED BY CITY OF COTTONWOOD UTILITY ENGINEER OR DESIGNEE AT THE FOLLOWING VERTICAL AND HORIZONTAL INTERVALS:

TABLE #1

MATERIAL/LOCATION	TEST INTERVAL-VERT.*	TEST INTERVAL-HORIZ.*
PIPE BEDDING BASE	TOP OF LIFT	EVERY 350' OR DAILY (WHICHEVER IS LESS)
PIPE BEDDING	12" ABOVE TOP OF PIPE AND AT TOP OF BEDDING	EVERY 350' OR DAILY (WHICHEVER IS LESS)
TRENCH BACKFILL ABOVE BEDDING	EVERY 18" OF VERTICAL FILL	EVERY 350' OR DAILY (WHICHEVER IS LESS)
TRENCH BACKFILL IN DRIVEWAYS	EVERY LIFT	AT EVERY DRIVEWAY LOCATION

3. THE CONTRACTOR IS RESPONSIBLE TO PROVIDE AN ACCURATE SET OF "AS-BUILT" PLANS TO THE CITY OF COTTONWOOD UTILITIES ENGINEER OR DESIGNEE PRIOR TO THE FINAL ACCEPTANCE OF THE PROJECT WORK. THESE AS-BUILT PLANS SHALL ACCURATELY SHOW THE LOCATIONS OF ALL CONSTRUCTED WATERLINES, FITTINGS, VALVES, BLOCKING, AND TIE-IN POINTS WITH THEIR RELATIONSHIP TO RIGHT-OF-WAY BOUNDARIES, LOT LINES, OR OTHER POINTS OF SURVEY.
4. THE CONTRACTOR IS RESPONSIBLE FOR MAINTAINING THE SURVEY ACCURACY OF ALL OF THE PROPOSED WORK AT THEIR EXPENSE. THE PROPOSED WORK SHALL BE STAKED BY USE OF MONUMENTATION THAT IS ACCEPTABLE TO THE CITY OF COTTONWOOD CITY ENGINEER.
5. THE CONTRACTOR SHALL BE RESPONSIBLE TO "POT-HOLE" OR UNCOVER ALL EXISTING WATER LINE TIE-IN POINTS TO VERIFY THEIR SIZE, MATERIAL, LOCATION AND DEPTH PRIOR TO TRENCHING FOR NEW WATER LINE CONSTRUCTION. THE CONTRACTOR SHALL ALSO LOCATE OR HAVE LOCATED ALL EXISTING UNDERGROUND PIPES, CONDUITS, AND UTILITIES PRIOR TO CONSTRUCTION.
6. ALL WATER MAIN PIPING SHALL BE DUCTILE IRON PRESSURE CLASS 350 ENCASED IN POLYETHYLENE SLEEVING, OR PVC C-900 CLASS DR14 AS SHOWN IN THE APPROVED PLANS.
7. ALL FITTINGS SHALL BE DOMESTIC ONLY AND COMPLY WITH AWWA STANDARDS. ALL VALVE BOXES SHALL BE "TYLER" ONLY.
8. WATER MAINS SHALL BE BURIED FOR A MINIMUM DEPTH OF 3 FEET FOR PIPE DIAMETERS 10 INCHES OR LESS AND A MINIMUM OF 4 FEET FOR PIPES WITH A DIAMETER GREATER THAN 10 INCHES UNLESS SHOWN DIFFERENTLY IN THE APPROVED PLANS OR APPROVED IN WRITING FROM THE CITY ENGINEER. THE DEPTH SHOWN IN PLANS IS ASSUMED TO BE THE MINIMUM DEPTH.
9. ALL WATER LINES AND FITTINGS SHALL BE BEDDED AND SHADED ABOVE, BELOW, AND AROUND WITH AN APPROVED ROCK FREE, SANDY BEDDING MATERIAL PER THE PIPE BEDDING AND TRENCH DETAIL IN THE APPROVED PLANS.
10. THE CONTRACTOR SHALL PROVIDE A BLUE COATED #12 COPPER TRACER WIRE SECURED TO THE BOTTOM CENTERLINE OF ALL WATER LINES AND SERVICES. THE CONTRACTOR SHALL PROVIDE A LOOPED PIGTAIL AT ALL IN-LINE VALVE LOCATIONS. TRACER WILL BE INSPECTED FOR CONTINUITY PRIOR TO ACCEPTANCE OF THE WORK. NON-CONTINUOUS OR FAULTY WIRE WILL BE REPAIRED AT THE CONTRACTOR'S EXPENSE.
11. ALL SERVICE LINES THAT ARE UNDER PAVEMENT OR CONCRETE SHALL BE SLEEVED IN 4-INCH CLASS 160 PVC CONDUITS OR APPROVED EQUAL. SERVICE LINES ARE TO BE CONSTRUCTED WITH CROSS-LINKED POLYETHYLENE PIPING.
12. ALL WATER LINE ENDS SHALL BE PROVIDED WITH AN APPROVED 2" FLUSH VALVE (BLOW-OFF) PER MAG STANDARD DETAIL OR AS SHOWN IN THE APPROVED PLANS.
13. ALL FIRE HYDRANT HOSE AND STEAMER CONNECTIONS SHALL MATCH STANDARD SIZE AND THREADS PER THE COTTONWOOD FIRE DEPARTMENT.
14. ALL FRAMES, COVERS, VALVE BOXES, VAULT LIDS, ETC., SHALL BE PROPERLY ADJUSTED TO FINISH GRADE WITH THE SURROUNDING GRADE OR PAVING AFTER THE COMPLETION OF PAVING AND GRADING.
15. THE CONTRACTOR SHALL DISINFECT EVERY PART OF THE NEWLY CONSTRUCTED WATER SYSTEM PER ARIZONA DEPARTMENT OF ENVIRONMENTAL QUALITY BULLETIN 8.
16. THE CONTRACTOR SHALL PROVIDE BACTERIOLOGICAL TESTING OF THE NEWLY CONSTRUCTED WATER SYSTEM PER ARIZONA DEPARTMENT OF ENVIRONMENTAL QUALITY BULLETIN 8 AND THE CITY OF COTTONWOOD ENGINEER OR DESIGNEE.
17. THE CONTRACTOR SHALL PERFORM PRESSURE TESTING OF THE NEWLY CONSTRUCTED WATER SYSTEM AT THE DIRECTION OF THE CITY OF COTTONWOOD UTILITIES ENGINEER OR DESIGNEE IN ACCORDANCE WITH AWWA STANDARDS. ALL LEAKS THAT ARE FOUND WILL BE REPAIRED AND RETESTED FOR PRESSURE BY THE CONTRACTOR PRIOR TO THE SYSTEM BEING PLACED INTO SERVICE. IF NECESSARY, THE SYSTEM MAY NEED TO BE ONCE AGAIN DISINFECTED AND MAY NEED TO UNDERGO BACTERIOLOGICAL TESTING AT THE CONTRACTOR'S EXPENSE PRIOR TO IT BEING PLACED IN SERVICE.
18. THE CITY OF COTTONWOOD ENGINEERING DEPARTMENT, INSPECTION STAFF, SHALL BE NOTIFIED 2 BUSINESS DAYS PRIOR TO THE START OF CONSTRUCTION SO THAT INSPECTIONS MAY BE SCHEDULED.
19. ALL WORK AND MATERIALS THAT DO NOT CONFORM TO THESE SPECIFICATIONS OR THE APPROVED PLANS ARE SUBJECT TO REMOVAL AND REPLACEMENT TO MATCH THESE APPROVED PLANS UNDER THE DIRECTION OF THE CITY OF COTTONWOOD ENGINEERING DEPARTMENT, INSPECTION STAFF, AT THE CONTRACTOR'S EXPENSE.
20. ALL WORK DONE BY THE CONTRACTOR SHALL BE SUBJECT TO INSPECTION BY THE CITY OF COTTONWOOD ENGINEERING DEPARTMENT, INSPECTION STAFF, PRIOR TO BURIAL. ANY WORK PERFORMED WITHOUT THE KNOWLEDGE OF THE CITY OF COTTONWOOD INSPECTION STAFF IS SUBJECT TO EXCAVATION AND INSPECTION, REMOVAL, REPLACEMENT, OR REPAIR AT THE DIRECTION OF THE CITY OF COTTONWOOD ENGINEERING DEPARTMENT, INSPECTION STAFF, SOLELY AT THE CONTRACTOR'S EXPENSE. REPAIR OF ANY DAMAGE DONE DURING THIS TYPE OF RE-EXPOSURE AND REQUIRED RE-TESTING, ETC., IS SOLELY THE RESPONSIBILITY OF THE CONTRACTOR.
21. ALL VAULTS OR OTHER UNDERGROUND STRUCTURES WILL BE PLACED ATOP SUBGRADE AND BASE-COURSE PLACED AND COMPACTED TO 95% MDD , TO THE SATISFACTION OF THE CITY OF COTTONWOOD ENGINEERING DEPARTMENT, INSPECTION STAFF.
22. ALL PLASTIC PIPES WILL BEAR THE SEAL BY THE NATIONAL SANITATION FOUNDATION.
23. ALL MATERIALS AND PRODUCTS THAT COME INTO CONTACT WITH WATER OR WATER TREATMENT CHEMICALS SHALL CONFORM TO ANSI/NSF STANDARD 61.
24. ALL CONSTRUCTION MATERIALS USED IN A PUBLIC WATER SYSTEM INCLUDING ALL RESIDENTIAL AND NON-RESIDENTIAL FACILITIES WHICH WILL BE CONNECTED TO SAID PUBLIC WATER SYSTEM, SHALL BE LEAD-FREE AS DEFINED BY R18-4-101.
25. WHEN ANY SEWER CROSSES A WATER PIPE AT A POINT AT WHICH THE SEWER IS 2 FEET OR MORE BELOW THE WATER MAIN, NO EXTRA PROTECTION OUTSIDE OF THE VERTICAL SEPARATION IS REQUIRED PER (

10. ALL STUB-OUTS SHALL HAVE A 2-INCH BRASS BALL CORP. STOP AS A BLOW-OFF, LEFT IN PLACE WITH A 2-INCH RISER, PER MAG STANDARD DETAIL 390 "A," AND SHALL BE ACCESSIBLE TO USE.

11. ALL VALVES 16-INCHES AND SMALLER SHALL BE PER MAG 630 WITH RESILIENT SEAT AWWA APPROVED GATE VALVES AND SHALL OPEN BY TURNING COUNTER-CLOCKWISE.

12. VALVES SHALL NOT BE LOCATED IN SIDEWALKS, GUTTERS, CURB, OR VALLEY GUTTERS, UNLESS PREAPPROVED BY THE CITY OF COTTONWOOD.

13. ALL VALVE BOXES SHALL CONFORM TO MAG STANDARD DETAIL 391-1, TYPE A. ALL RECLAIMED WATER VALVE BOXES SHALL UTILIZE SQUARE COVERS WITH THE WORDS "RECLAIMED WATER" IMPRINTED ON THEM. COVERS SHALL BE PAINTED 'RECLAIMED WATER' PURPLE UTILIZING AN ACCEPTABLE PAINT AS APPROVED BY THE CITY OF COTTONWOOD ENGINEERING DEPARTMENT.

14. CONTRACTORS SHALL NOT OPERATE VALVES ON THE EXISTING CITY SYSTEM.

15. TO REQUEST A WATER SYSTEM SHUT DOWN A "WATER SYSTEM SHUT DOWN REQUEST" FORM MUST BE SUBMITTED. THIS FORM SHALL BE SUBMITTED TEN DAYS IN ADVANCE OF ANY REQUESTS TO SHUT DOWN ANY LINES IN THE CITY OF COTTONWOOD'S DISTRIBUTION SYSTEM. THE FORM IS TO BE SUBMITTED THROUGH THE ENGINEERING INSPECTOR ASSIGNED TO THE PROJECT, WHO WILL IN TURN COORDINATE WITH NECESSARY UTILITY STAFF. FAILURE TO COMPLETE THIS FORM MAY RESULT IN DELAYS TO CONSTRUCTION ACTIVITIES.

16. NEW RECLAIMED WATERLINES MUST MAINTAIN MINIMUM SEPARATION (BOTH VERTICAL AND HORIZONTAL) FROM POTABLE WATERLINES AND SEWER MAINS PER MAG SPECTION 610.5 AND THE MAG STANDARD DETAIL 404 EXCEPT AS MODIFIED: WHEN IT COMES TO SEPARATION FROM SEWER MAINS, RECLAIMED AND NON POTABLE WATERLINES SHALL USE THE SAME REQUIREMENTS AS POTABLE WATERLINES. WHEN IT COMES TO SEPARATION FROM POTABLE WATERLINES, RECLAIMED AND NON POTABLE WATERLINES SHALL USE THE SAME REQUIREMENTS AS SEWER MAINS.

17. ALL RECLAIMED WATERLINES REQUIRE THE INSTALLATION OF METALLIC LOCATING TAPE, WHICH SHALL BE INSTALLED IN ACCORDANCE WITH MAG SPEC. 616.4. THE REQUIRED COLOR FOR RECLAIMED WATER PIPELINES IS RECLAIMED WATER PURPLE.

18. PRIOR TO BEING PUT INTO SERVICE, NEW RECLAIMED WATERLINES SHALL BE DISINFECTED AND TESTED PER ADEQ BULLETIN #8.

19. ALL FIRE HYDRANT HOSE AND STEAMER CONNECTIONS SHALL MATCH STANDARD SIZE AND THREADS PER THE LOCAL FIRE DEPARTMENT.

20. ALL ABOVE GROUND RECLAIMED WATER INFRASTRUCTURE SHALL BE RECLAIMED WATER PURPLE IN COLOR.

21. ALL NEW LANDSCAPE AND TURF IRRIGATION INFRASTRUCTURE (ABOVE AND BELOW GROUND) SHALL BE RECLAIMED WATER PURPLE IN COLOR.

22. THE CONTRACTOR SHALL PROVIDE A PURPLE COATED #12 COPPER TRACER WIRE SECURED TO THE BOTTOM CENTERLINE OF ALL RECLAIMED WATER LINES AND SERVICES. THE CONTRACTOR SHALL PROVIDE A LOOPED PIGTAIL AT ALL IN-LINE VALVE LOCATIONS. TRACER WILL BE INSPECTED FOR CONTINUITY PRIOR TO ACCEPTANCE OF THE WORK. NON-CONTINUOUS OR FAULTY WIRE WILL BE REPAIRED AT THE CONTRACTOR'S EXPENSE.

Revisions:

Engineer: Name	
Technician: Name	-
Scale: 1" = 20'	-
Date: mm/dd/yyyy	-
Drawing No: DWG Name	-

GENERAL NOTES

Engineering Department

1490 W. Mingus Ave.
Cottonwood, AZ 86326

"Inspiring a Vibrant Community"

SHEET ? OF ?

DWG FullPath: C:\Users\Robert\Desktop\CAD Standards\02 General Notes.dwg Plot Date/Time: 01/28/19 03:51pm

GRAPHIC SCALE

0 ? ? ?

(IN FEET)
1 inch = ? ft.

Contact Arizona 811 at least two full working days before you begin excavation

ARIZONA811

Call 811 or click Arizona811.com

Revisions:

Engineer: Name

Technician: Name

Scale: 1" = 20'

Date: mm/dd/yyyy

Drawing No: DWG Name

FIRAND ENGROAME

- - -

Engineering Department

1490 W. Mingus Ave.
Cottonwood, AZ 86326

"Inspiring a Vibrant Community"

SHEET ? OF ?

DWG FullPath: C:\Users\Robert\Desktop\CAD Standards\03 Plan Sheet.dwgPlot Date/Time: 01/28/19 03:52pm

GRAPHIC SCALE

0 ? ? ?

(IN FEET)
1 inch = ? ft. HOR.
1 inch = ? ft. VER.

?	?
?	?
?	?
?	?
?	?
?	?
?	?
?	?
?	?
?	?

STA STA STA STA STA STA STA STA STA STA STA STA STA STA STA STA STA STA STA STA STA STA STA STA STA

Contact Arizona 811 at least two full working days before you begin excavation

ARIZONA811 BLUE STAKE, INC.

Call 811 or click Arizona811.com

Revisions:

Engineer: Name	
Technician: Name	
Scale: 1" = 20'	
Date: mm/dd/yyyy	
Drawing No: DWG Name	

PLAN & PROFILE

- - -

Engineering Department

1490 W. Mingus Ave.
Cottonwood, AZ 86326

"Inspiring a Vibrant Community."

SHEET ? OF ?

DWG FullPath: C:\Users\Robert\Desktop\CAD Standards\04 Plan & Profile Sheet.dwgPlot Date/Time: 01/28/19 03:53pm